PROJECT: BP-5500B

CONTRACT: DA00242

STATE OF NORTH CAROLINA
DIVISION OF HIGHWAYS

TYRRELL COUNTY

STATE	STATE PROJECT REFERENCE NO.	SHEET NO.	TOTAL SHEETS
N.C.	BP-5500B	1	

STATE PROJ. NO.	F.A. PROJ. NO.	DESCRIPTION
50070.1.1	BRSTP-0094(4)	P.E.
50070.3.FR2	BRSTP-0094(4)	CONST.

LOCATION: ***TYRRELL COUNTY:***
BRIDGE #8 ON NC 94 ACROSS RIDERS CREEK
BRIDGE #21 ON SR 1105 (NEWLANDS ROAD) ACROSS THE SCUPPERNONG RIVER

TYPE OF WORK: ***BRIDGE PRESERVATION – SUPERSTRUCTURE AND DECK REPAIR AND PAINTING OF EXISTING BRIDGE STRUCTURES***

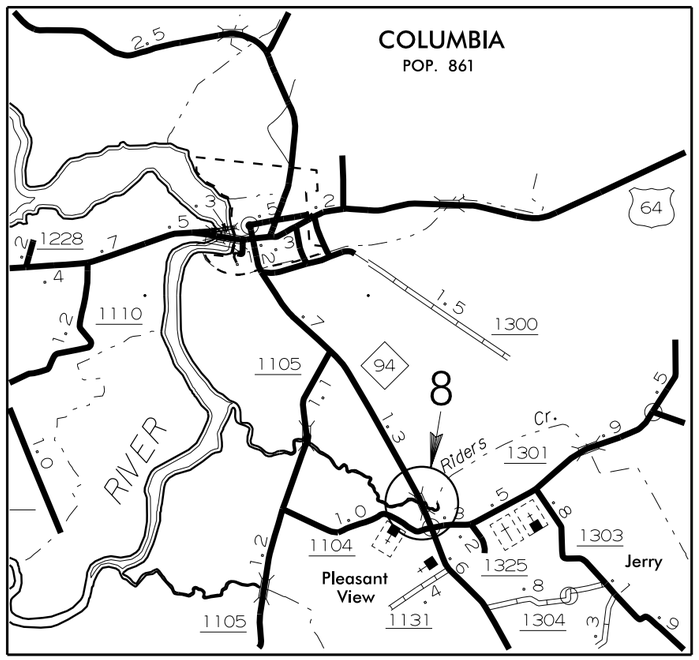

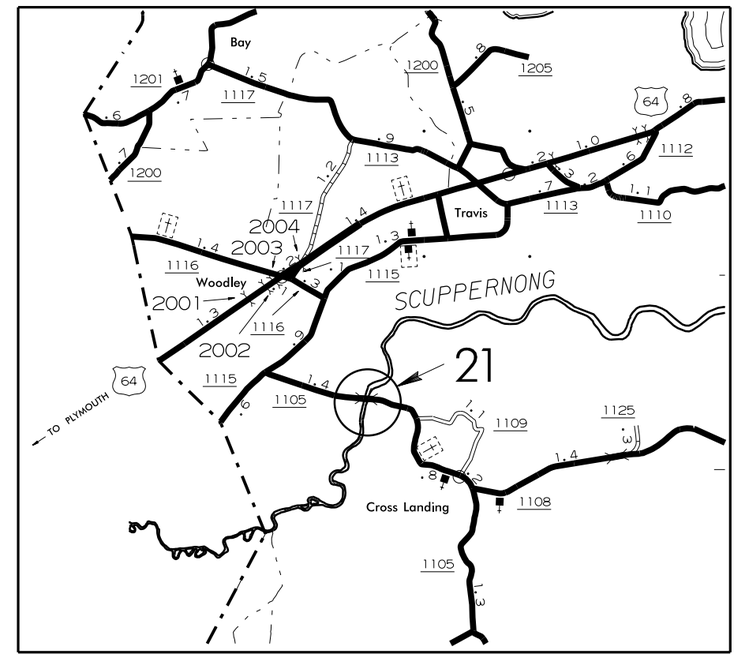

DESIGN DATA

TYRRELL COUNTY
#8 ADT 2012 = 2,000
#21 ADT 2012 = 140

PROJECT LENGTH

TYRRELL COUNTY
#8 = 0.029 MILE
#21 = 0.056 MILE

Prepared in the Office of:
DEPARTMENT OF TRANSPORTATION
DIVISION OF HIGHWAYS
STRUCTURES MANAGEMENT UNIT – PRESERVATION & REPAIR GROUP
1000 BIRCH RIDGE DR. RALEIGH, N.C. 27610

TIMOTHY M. SHERRILL, P.E.
PROJECT ENGINEER

2012 STANDARD SPECIFICATIONS

LETTING DATE:
MARCH 18, 2015

DocuSigned by:
John A. Yannaccone
7BC38E9CE...
NORTH CAROLINA PROFESSIONAL SEAL 32492 ENGINEER JOHN A. YANNACCONE
1/29/2015

JOHN A. YANNACCONE, P.E.
PROJECT DESIGN ENGINEER

PROJECT: BP–5500B

CONTRACT: DA00242

STATE OF NORTH CAROLINA
DIVISION OF HIGHWAYS

TYRRELL COUNTY

STATE	STATE PROJECT REFERENCE NO.	SHEET NO.	TOTAL SHEETS
N.C.	BP-5500B	1	

STATE PROJ. NO.	F.A. PROJ. NO.	DESCRIPTION
50070.1.1	BRSTP–0094(4)	P.E.
50070.3.FR2	BRSTP–0094(4)	CONST.

LOCATION: *TYRRELL COUNTY:*
BRIDGE #8 ON NC 94 ACROSS RIDERS CREEK
BRIDGE #21 ON SR 1105 (NEWLANDS ROAD) ACROSS THE SCUPPERNONG RIVER

TYPE OF WORK: *BRIDGE PRESERVATION – SUPERSTRUCTURE AND DECK REPAIR AND PAINTING OF EXISTING BRIDGE STRUCTURES*

INDEX OF SHEETS

1	TITLE SHEET
1A	INDEX OF SHEETS
S–1	TOTAL BILL OF MATERIAL
S–2 THRU S–7	STRUCTURAL PLANS – TYRRELL #8
S–8 THRU S–16	STRUCTURAL PLANS – TYRRELL #21
SN	STANDARD NOTES
TMP–1 THRU TMP–3	TRAFFIC MANAGEMENT PLANS

TOTAL BILL OF MATERIAL

TYRRELL COUNTY BRIDGE NO.	INCIDENTAL MILLING	ASPHALT CONCRETE SURFACE COURSE, TYPE S9.5B	ASPHALT BINDER FOR PLANT MIX	FOAM JOINT SEALS	CLEANING & REPAINTING OF BRIDGE #__	PAINTING CONTAINMENT FOR BRIDGE #__	POLLUTION CONTROL	BEAM REPAIR	BRIDGE JOINT DEMOLITION	CONCRETE DECK REPAIR FOR EPOXY OVERLAY	EPOXY OVERLAY SYSTEM	BRIDGE JACKING
	SQ. YDS.	TONS	TONS	LUMP SUM	LUMP SUM	LUMP SUM	LUMP SUM	LBS.	SQ. FT.	SQ. FT.	SQ. FT.	EACH
8	140	12	1	LUMP SUM	LUMP SUM	LUMP SUM	LUMP SUM	———	51	6	2,882	———
21	115	10	1	LUMP SUM	LUMP SUM	LUMP SUM	LUMP SUM	640	132	0	5,748	4
TOTAL	255	22	2	LUMP SUM	LUMP SUM	LUMP SUM	LUMP SUM	640	183	6	8,630	4

PROJECT NO. BP-5500B
TYRRELL COUNTY
BRIDGE NO. 8 & 21

DocuSigned by:
John A. Yannaccone
7BC36E9CEE894E...

NORTH CAROLINA PROFESSIONAL SEAL 32492 ENGINEER JOHN A. YANNACCONE

1/27/2015

STATE OF NORTH CAROLINA
DEPARTMENT OF TRANSPORTATION
RALEIGH

TOTAL BILL OF MATERIAL

REVISIONS						SHEET NO.
NO.	BY:	DATE:	NO.	BY:	DATE:	S-1
1			3			TOTAL SHEETS
2			4			16

DRAWN BY : S. T. SANDOR DATE : 10/2014
CHECKED BY : J. A. YANNACCONE DATE : 11/2014

27-JAN-2015 12:42
R:\Structures\FinalDrawings\BP-5500B_SD_BM.dgn
jayannaccone

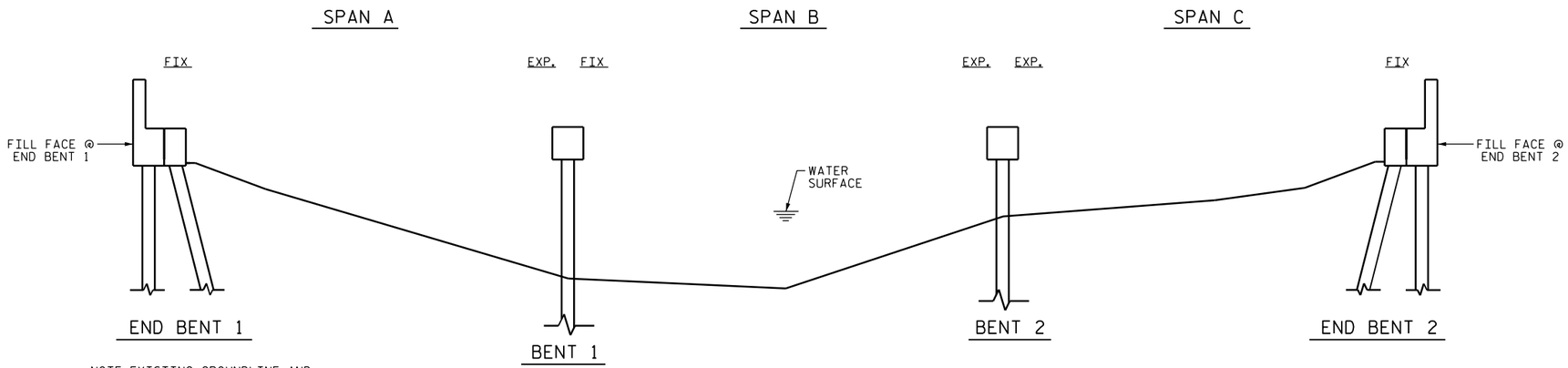

NOTE: EXISTING GROUNDLINE AND WATER SURFACE LEVEL ARE FROM THE 02/18/2014 INSPECTION REPORT.

SECTION ALONG ℄ ROADWAY

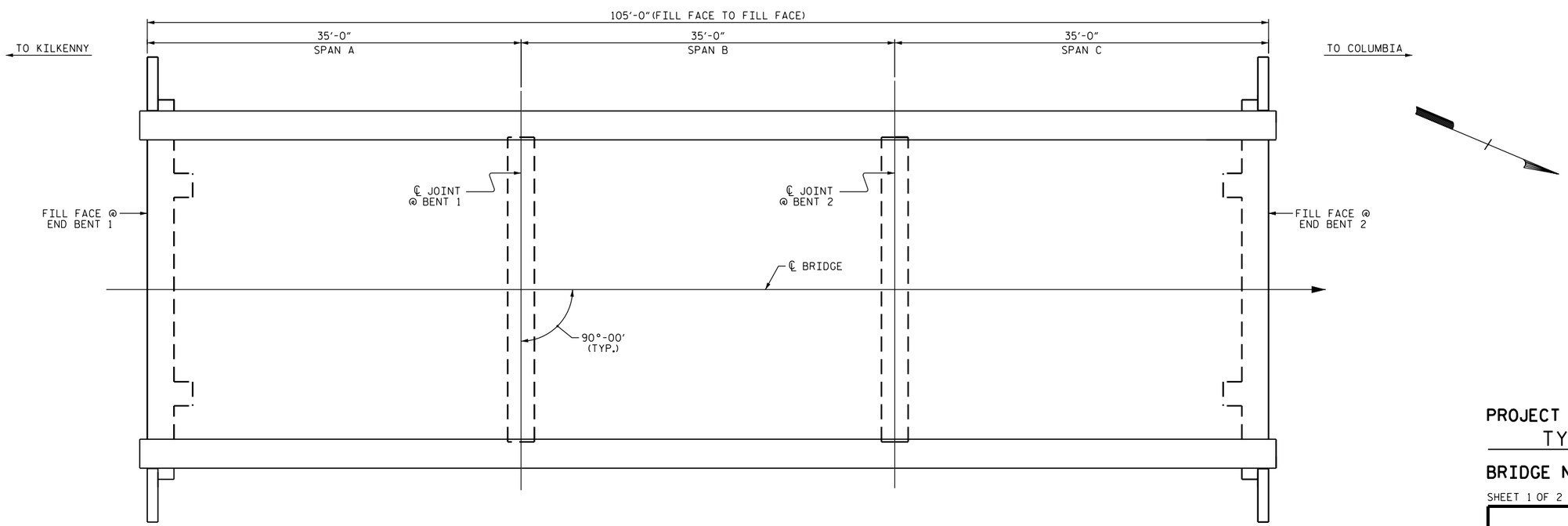

PLAN

SCOPE OF WORK:

- CLEAN AND PAINT STRUCTURAL STEEL
- PARTIALLY REMOVE BRIDGE DECK CONCRETE USING SHOTBLASTING METHODS
- OVERLAY PREPARED BRIDGE DECK WITH EPOXY OVERLAY SYSTEM
- DEMOLISH EXISTING BRIDGE DECK JOINTS
- RECONSTRUCT BRIDGE DECK JOINTS AND INSTALL NEW FOAM JOINT SEALS
- MILL AND PAVE ASPHALT APPROACHES

DocuSigned by:
John A. Yannaccone
7BC36E9CEE894...

NORTH CAROLINA PROFESSIONAL SEAL 32492 ENGINEER JOHN A. YANNACCONE

1/27/2015

PROJECT NO. BP-5500B
TYRRELL COUNTY
BRIDGE NO. 8
SHEET 1 OF 2

STATE OF NORTH CAROLINA
DEPARTMENT OF TRANSPORTATION
RALEIGH

GENERAL DRAWING
FOR BRIDGE ON NC 94
OVER RIDERS CREEK

REVISIONS						SHEET NO.
NO.	BY:	DATE:	NO.	BY:	DATE:	S-2
1			3			TOTAL SHEETS
2			4			16

DRAWN BY : S. T. SANDOR DATE : 10/2014
CHECKED BY : J. A. YANNACCONE DATE : 11/2014

27-JAN-2015 12:43
R:\Structures\FinalDrawings\TYRELL8_SD_GD.dgn
jayannaccone

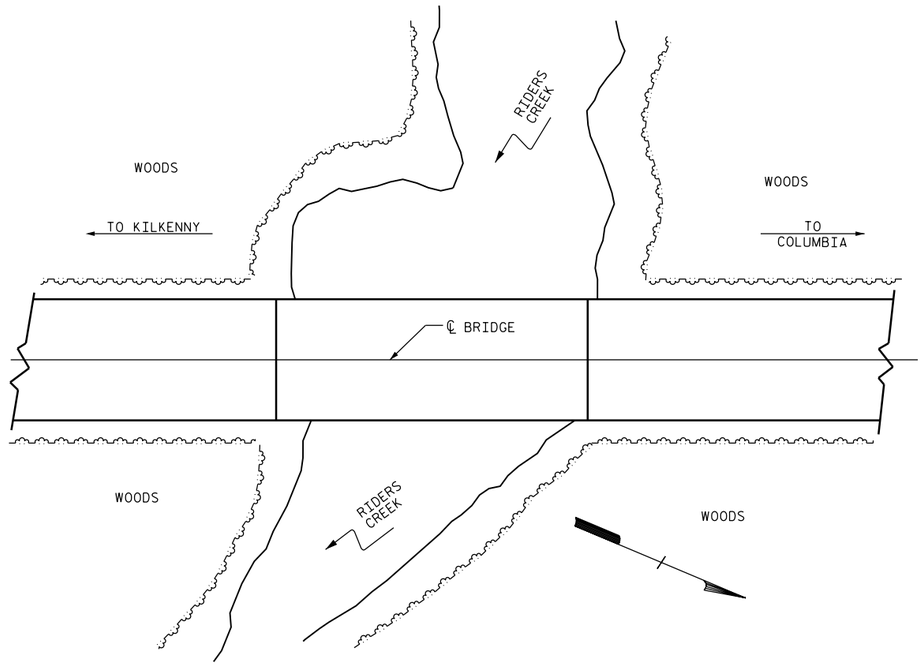

LOCATION SKETCH

INFORMATION INDICATED ON THE LOCATION SKETCH SHALL BE CONSIDERED GENERAL INFORMATION ONLY. THE CONTRACTOR SHALL CONFIRM, THROUGH OTHER SOURCES, SPECIFIC INFORMATION REGARDING THE BRIDGES, ROADWAYS, UTILITIES, SURROUNDING AREA, AND ANY OTHER ASPECTS THAT MAY BE NECESSARY TO PERFORM AND COMPLETE THE PROJECT.

NOTES

EXISTING DIMENSIONS AND BRIDGE CONDITION ARE FROM BEST INFORMATION AVAILABLE. THE CONTRACTOR SHALL FIELD VERIFY THE INFORMATION SHOWN ON THE PLANS AND NOTIFY THE ENGINEER IF ACTUAL DIMENSIONS AND CONDITIONS DIFFER.

EXISTING JOINTS AND DECK DRAINS SHALL BE SEALED PRIOR TO BEGINNING SURFACE PREPARATION OF BRIDGE DECK.

ROADWAY MILLING IS INCLUDED TO ENSURE A SMOOTH TRANSITION ONTO THE BRIDGE FLOOR. DIMENSIONS SHOWN ARE APPROXIMATE. CONTRACTOR SHALL MILL AS REQUIRED TO PROVIDE A SMOOTH TRANSITION TO THE ROADWAY AT BOTH ENDS OF BRIDGE.

FOR CLEANING AND PAINTING OF BRIDGE AND POLLUTION CONTROL, SEE SPECIAL PROVISIONS.

FOR CONCRETE DECK REPAIR FOR EPOXY OVERLAY SYSTEM, SEE SPECIAL PROVISIONS.

FOR FOAM JOINT SEALS, SEE SPECIAL PROVISIONS.

FOR ELASTOMERIC CONCRETE, SEE SPECIAL PROVISIONS.

FOR OVERLAY OF BRIDGE WITH EPOXY OVERLAY SYSTEM, SEE SPECIAL PROVISIONS.

FOR SUBMITTAL OF WORKING DRAWINGS, SEE SPECIAL PROVISIONS.

FOR FALSEWORK AND FORMWORK, SEE SPECIAL PROVISIONS.

FOR CRANE SAFETY, SEE SPECIAL PROVISIONS.

FOR GROUT FOR STRUCTURES, SEE SPECIAL PROVISIONS.

FOR BRIDGE JOINT DEMOLITION, SEE SPECIAL PROVISIONS.

IT IS THE CONTRACTOR'S RESPONSIBILITY TO FOLLOW ALL STATE AND FEDERAL SAFETY REQUIREMENTS.

FOR CONTROL OF TRAFFIC AND LIMITS ON PHASING OF CONSTRUCTION, SEE TRANSPORTATION MANAGEMENT PLAN SHEETS.

LONGITUDINAL CONSTRUCTION JOINTS OF OVERLAYS SHALL BE LOCATED ALONG THE CENTERLINE OR EDGE OF TRAVEL LANES.

PROJECT NO. BP-5500B
TYRRELL COUNTY
BRIDGE NO. 8
SHEET 2 OF 2

DocuSigned by:
John A. Yannaccone
7BC36E9CEE894...

NORTH CAROLINA PROFESSIONAL SEAL 32492 ENGINEER JOHN A. YANNACCONE

1/27/2015

STATE OF NORTH CAROLINA
DEPARTMENT OF TRANSPORTATION
RALEIGH

GENERAL DRAWING
FOR BRIDGE ON NC 94
OVER RIDERS CREEK

REVISIONS						SHEET NO.
NO.	BY:	DATE:	NO.	BY:	DATE:	S-3
1			3			TOTAL SHEETS
2			4			16

DRAWN BY : S. T. SANDOR DATE : 10/2014
CHECKED BY : J. A. YANNACCONE DATE : 11/2014

27-JAN-2015 12:43
R:\Structures\FinalDrawings\TYRELL8_SD_GD.dgn
jayannaccone

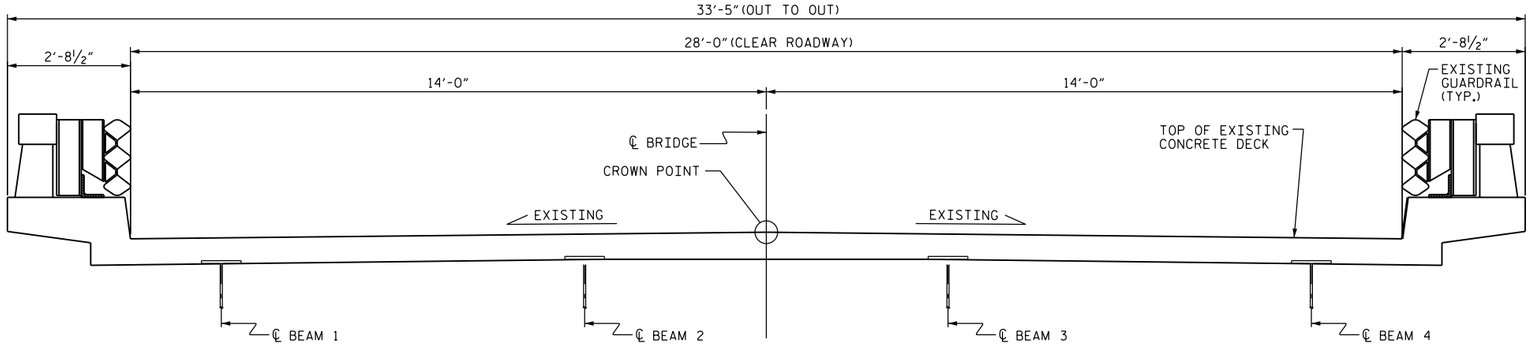

TYPICAL SECTION

(EXISTING)

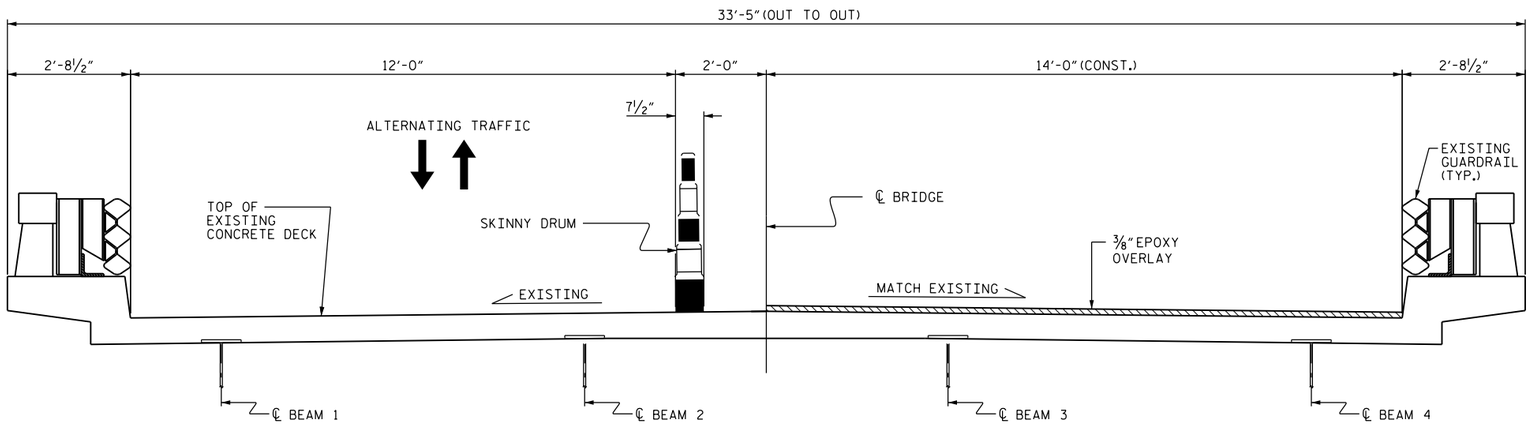

TYPICAL SECTION

(RIGHT LANE OVERLAY WORK)

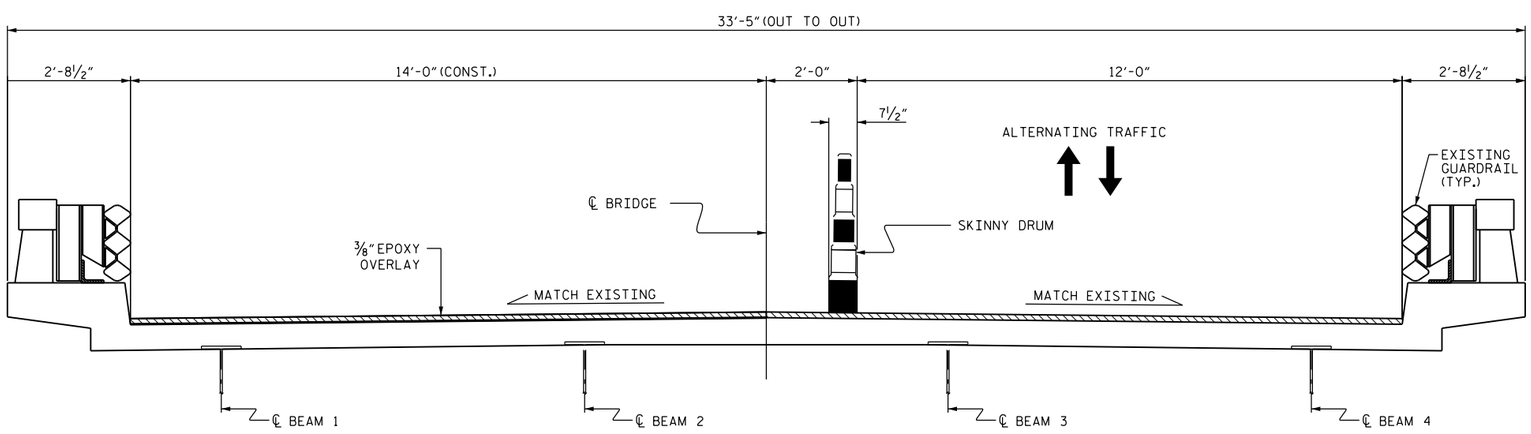

TYPICAL SECTION

(LEFT LANE OVERLAY WORK)

NOTE:

THE WORK STAGING ON THIS PLAN SHEET INDICATES THAT THE RIGHT LANE OVERLAY WORK IS PERFORMED FIRST, FOLLOWED BY THE LEFT OVERLAY LANE WORK. THE CONTRACTOR MAY ELECT TO SEQUENCE THE WORK DIFFERENTLY, BUT THE DIMENSIONS OF THE WORK ZONE AND CLEAR ROADWAY AREAS SHALL MATCH THAT INDICATED ON THIS PLAN SHEET, RESPECTIVE TO THE LANE WHERE THE WORK IS BEING PERFORMED.

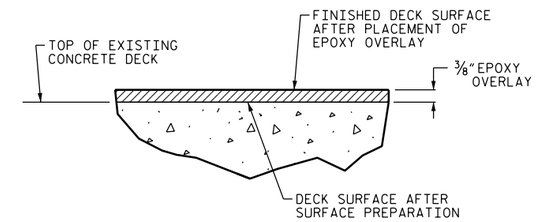

DETAIL FOR EPOXY OVERLAY

PROJECT NO. BP-5500B

TYRRELL COUNTY

BRIDGE NO. 8

DocuSigned by:
John A. Yannaccone
7BC36E9CEE894...

NORTH CAROLINA PROFESSIONAL SEAL 32492 ENGINEER JOHN A. YANNACCONE

1/27/2015

STATE OF NORTH CAROLINA
DEPARTMENT OF TRANSPORTATION
RALEIGH

TYPICAL SECTION & EPOXY OVERLAY DETAIL

REVISIONS						SHEET NO.
NO.	BY:	DATE:	NO.	BY:	DATE:	S-4
1			3			TOTAL SHEETS
2			4			16

DRAWN BY : S. T. SANDOR DATE : 11/2014
CHECKED BY : J. A. YANNACCONE DATE : 11/2014

27-JAN-2015 12:43
R:\Structures\FinalDrawings\TYRELL8_SD_TS.dgn
jayannaccone

SUMMARY OF QUANTITIES

	ESTIMATE	ACTUAL
CONCRETE DECK REPAIR FOR EPOXY OVERLAY	6.0 SQ. FT.	
BRIDGE JOINT DEMOLITION	51 SQ. FT.	
EPOXY OVERLAY SYSTEM	2,882 SQ. FT.	

NOTE:

FOR BRIDGE JOINT DEMOLITION, SEE "JOINT DETAILS" SHEET.

FOR SECTIONS A-A AND B-B, SEE "JOINT DETAILS" SHEET.

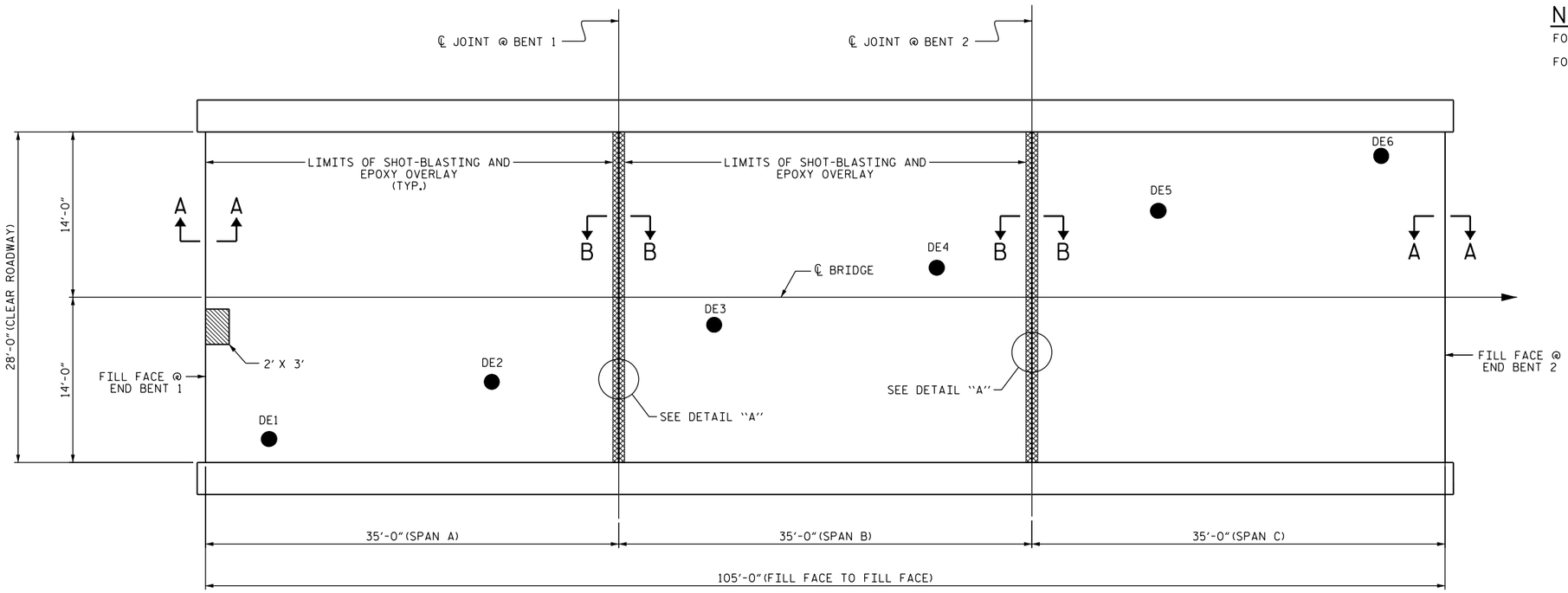

PLAN

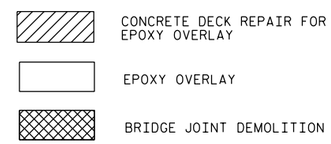

BRIDGE DECK EVALUATION SAMPLES

TEST LOCATION	REBAR COVER	CONCRETE STRENGTH
DE1	1 7/8"	3,920 PSI
DE2	1 5/8"	5,640 PSI
DE3	1 13/16"	6,180 PSI
DE4	2"	6,480 PSI
DE5	1 3/8"	4,380 PSI
DE6	1 5/8"	4,400 PSI

NOTE: BRIDGE DECK EVALUATION SAMPLE DATA PROVIDED BY HDR REPORT, DATED 06/14/2014.

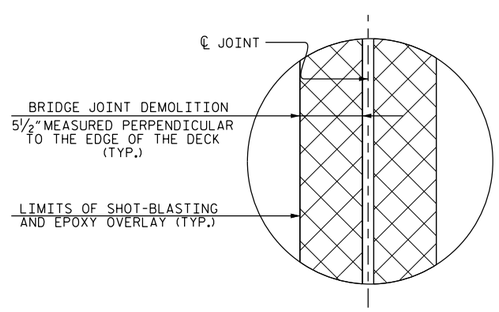

DETAIL "A"

PROJECT NO. BP-5500B

TYRRELL COUNTY

BRIDGE NO. 8

DocuSigned by:
John A. Yannaccone
7BC36E9CEE89...

NORTH CAROLINA PROFESSIONAL SEAL 32492 ENGINEER JOHN A. YANNACCONE

1/27/2015

STATE OF NORTH CAROLINA
DEPARTMENT OF TRANSPORTATION
RALEIGH

SURFACE PREPARATION AND EPOXY OVERLAY

REVISIONS						SHEET NO.
NO.	BY:	DATE:	NO.	BY:	DATE:	S-5
1			3			TOTAL SHEETS
2			4			16

DRAWN BY : S. T. SANDOR DATE : 11/2014
CHECKED BY : J. A. YANNACCONE DATE : 11/2014

27-JAN-2015 12:43
R:\Structures\FinalDrawings\TYRELL8_SD_S*.dgn
jayannaccone

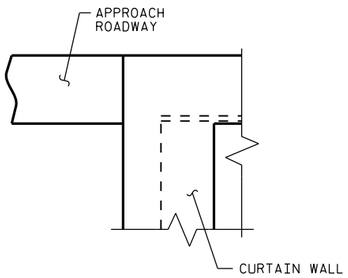

SECTION A-A
(EXISTING)

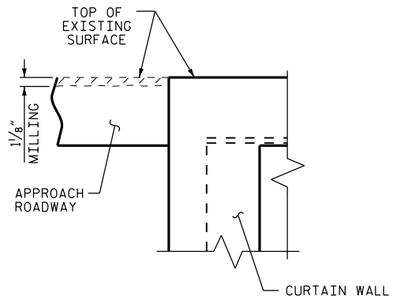

SECTION A-A
(MINIMUM EXISTING DEMOLITION)

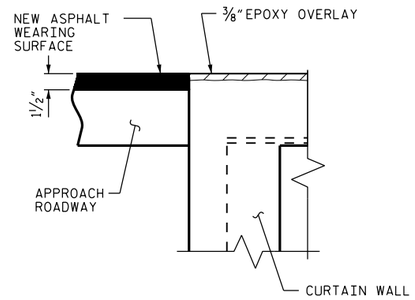

SECTION A-A
(PROPOSED)

NOTES:

FOR FOAM JOINT SEALS SEE SPECIAL PROVISIONS.

THE INSTALLED FOAM JOINT SEAL SHALL BE WATER TIGHT.

NOMINAL UNCOMPRESSED SEAL WIDTH OF FOAM JOINT SEAL SHALL BE 2".

THE CONTRACTOR WILL NOT BE PERMITTED TO FORM THE JOINTS IN LIEU OF SAWING THE JOINT.

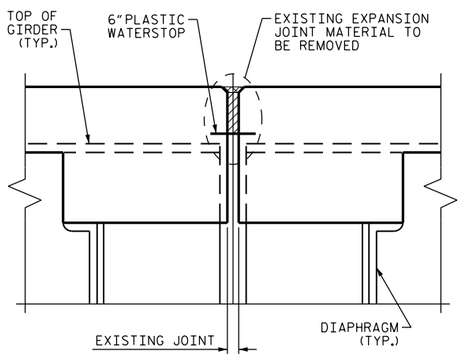

SECTION B-B
(EXISTING)

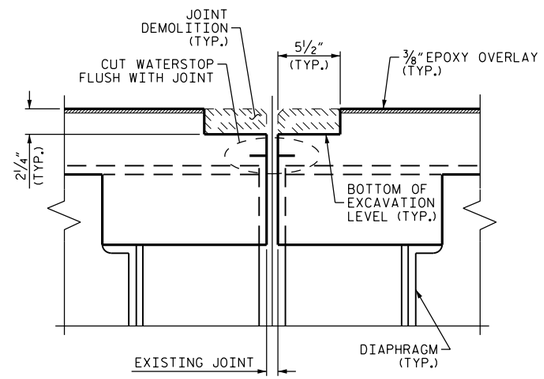

SECTION B-B
(MINIMUM EXISTING JOINT DEMOLITION)

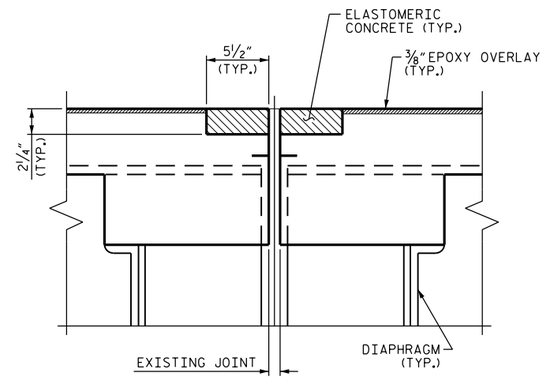

SECTION B-B
(PROPOSED JOINT PRE-SAWED DIMENSIONS)

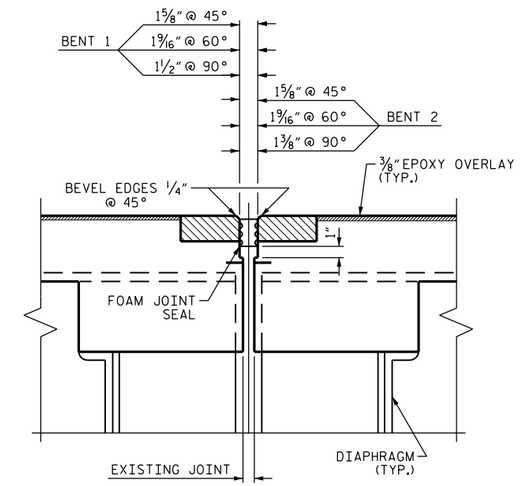

SECTION B-B
(PROPOSED FOAM JOINT SEAL)

IF THE EMBEDDED PORTION OF THE EXISTING PLASTIC WATERSTOP IS EXPOSED DURING REMOVAL OF UNSOUND CONCRETE OR IF UNSOUND CONCRETE IS REMOVED WITHIN 2" OF THE WATERSTOP, THE ENTIRE WATERSTOP SHALL BE REMOVED.

DEMOLISH BRIDGE JOINT AREA TO THE NECESSARY DEPTH, SUCH THAT ELASTOMERIC CONCRETE SHALL BE FOUNDED ON CONCRETE OR REPAIR CONCRETE SUBSTRATE.

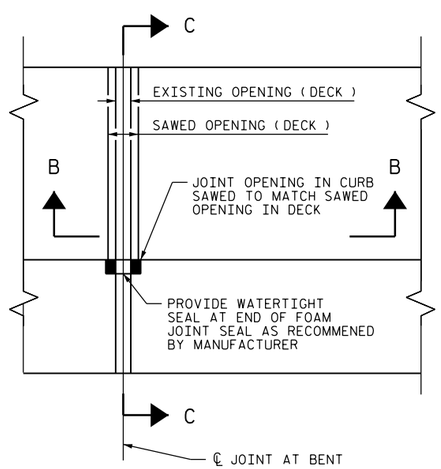

PLAN

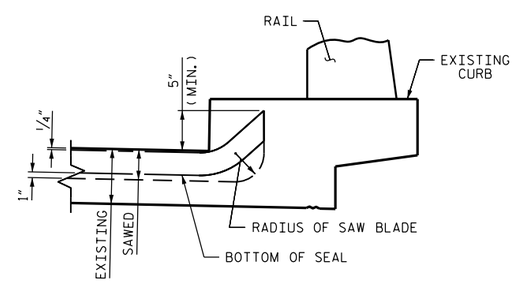

SECTION C-C

JOINT SEAL DETAILS AT BENT

PROJECT NO. BP-5500B
TYRRELL COUNTY
BRIDGE NO. 8

STATE OF NORTH CAROLINA
DEPARTMENT OF TRANSPORTATION
RALEIGH

JOINT DETAILS

DocuSigned by:
John A. Yannaccone
7BC36E9CEE89...

NORTH CAROLINA PROFESSIONAL SEAL 32492 ENGINEER JOHN A. YANNACCONE

1/27/2015

REVISIONS						SHEET NO.
NO.	BY:	DATE:	NO.	BY:	DATE:	S-6
1			3			TOTAL SHEETS
2			4			16

DRAWN BY : S. T. SANDOR DATE : 11/2014
CHECKED BY : J. A. YANNACCONE DATE : 11/2014

27-JAN-2015 12:44
R:\Structures\FinalDrawings\TYRELL8_SD_JS.dgn
jayannaccone

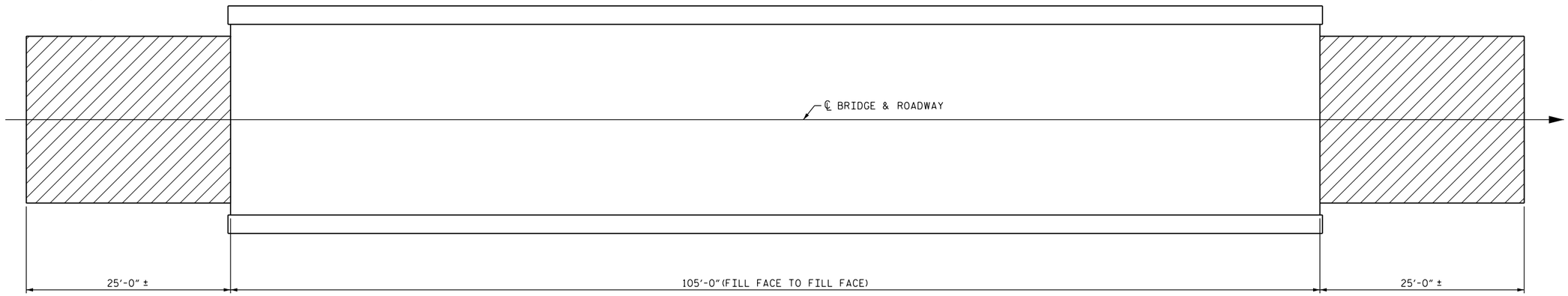

INCIDENTAL MILLING

PLAN

SUMMARY OF QUANTITIES		
	ESTIMATE	ACTUAL
INCIDENTAL MILLING	140 SQ. YDS.	
ASPHALT CONCRETE SURFACE COURSE, TYPE S9.5B	12 TONS	

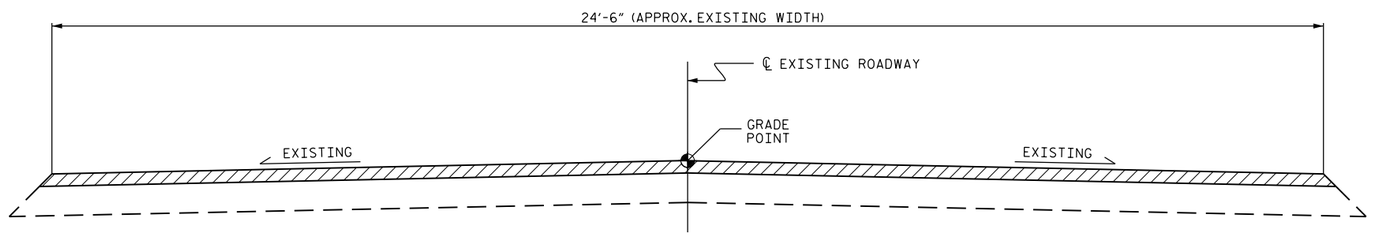

TYPICAL ROADWAY MILLING SECTION

(MILL TO APPROXIMATE 1⅛" DEPTH)

C1	PROPOSED VARIABLE DEPTH ASPHALT CONCRETE SURFACE COURSE, TYPE S9.5B AT AN AVERAGE RATE OF 112 LBS. PER SQ. YD. PER 1" DEPTH. TO BE PLACED IN LAYERS NOT LESS THAN 1½" IN DEPTH OR GREATER THAN 2 " IN DEPTH.

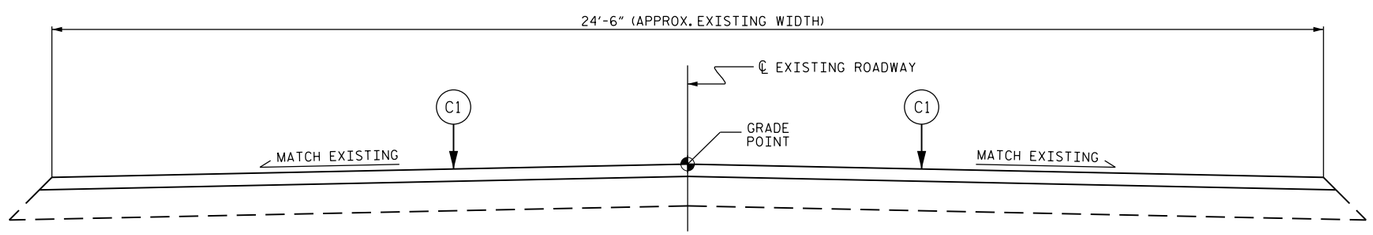

TYPICAL PROPOSED ROADWAY SECTION

NOTES:

INCIDENTAL MILLING - EXISTING APPROACH ASPHALT PAVEMENT TO BE MILLED AS NECESSARY TO ATTAIN MINIMUM 1½" DEPTH OF NEW ASPHALT PAVEMENT. PROVIDE NEW ASPHALT PAVING THICKNESS TO CREATE A SMOOTH TRANSITION TO THE APPROACH SLABS, AS SHOWN. NEW ASPHALT PAVING THICKNESS MAY EXCEED 1½" DUE TO SETTLEMENT OF THE EXISTING APPROACH ASPHALT PAVEMENT.

PROJECT NO. BP-5500B
TYRRELL COUNTY
BRIDGE NO. 8

DocuSigned by:
John A. Yannaccone
7BC36E9CEE8C...

NORTH CAROLINA PROFESSIONAL SEAL 32492 ENGINEER JOHN A. YANNACCONE

1/27/2015

STATE OF NORTH CAROLINA
DEPARTMENT OF TRANSPORTATION
RALEIGH

APPROACH MILLING AND TYPICAL ROADWAY SECTIONS

REVISIONS								SHEET NO.
NO.	BY:	DATE:	NO.	BY:	DATE:			S-7
1			3					TOTAL SHEETS
2			4					16

DRAWN BY : S. T. SANDOR DATE : 11/2014
CHECKED BY : J. A. YANNACCONE DATE : 11/2014

27-JAN-2015 12:44
R:\Structures\Final Drawings\TYRELL8_SD_APPRDWY.dgn
jayannaccone

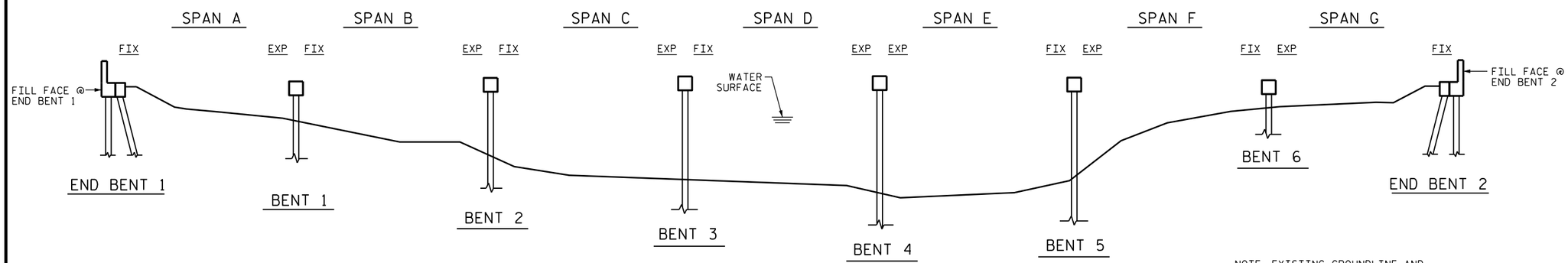

NOTE: EXISTING GROUNDLINE AND WATER SURFACE LEVEL ARE FROM THE 02/22/2012 INSPECTION REPORT.

SECTION ALONG ℄ ROADWAY

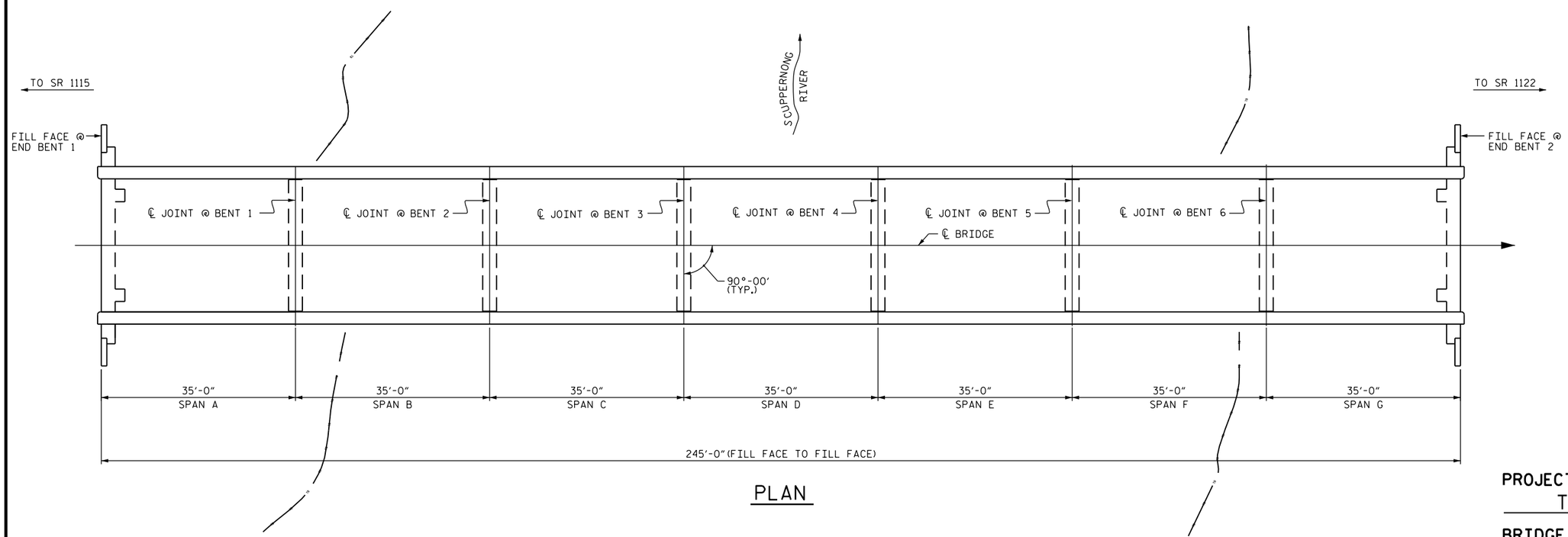

PLAN

PROJECT NO. BP-5500B
TYRRELL COUNTY
BRIDGE NO. 21

SHEET 1 OF 2

SCOPE OF WORK:

- REPAIR STRUCTURAL STEEL
- CLEAN AND PAINT STRUCTURAL STEEL
- PARTIALLY REMOVE BRIDGE DECK CONCRETE USING SHOTBLASTING METHODS
- OVERLAY PREPARED BRIDGE DECK WITH EPOXY OVERLAY SYSTEM
- DEMOLISH EXISTING BRIDGE DECK JOINTS
- RECONSTRUCT BRIDGE DECK JOINTS AND INSTALL NEW FOAM JOINT SEALS
- MILL AND PAVE ASPHALT APPROACHES

DocuSigned by:
John A. Yannaccone
7BC36E9CEE894...

NORTH CAROLINA PROFESSIONAL SEAL 32492 ENGINEER JOHN A. YANNACCONE

1/27/2015

STATE OF NORTH CAROLINA
DEPARTMENT OF TRANSPORTATION
RALEIGH

GENERAL DRAWING
FOR BRIDGE ON SR 1105
(NEWLANDS ROAD)
OVER SCUPPERNONG RIVER

REVISIONS						SHEET NO.
NO.	BY:	DATE:	NO.	BY:	DATE:	S-8
1			3			TOTAL SHEETS
2			4			16

DRAWN BY : S. T. SANDOR DATE : 11/2014
CHECKED BY : J. A. YANNACCONE DATE : 12/2014

27-JAN-2015 12:44
R:\Structures\FinalDrawings\TYRELL21_SD_GD.dgn
jayannaccone

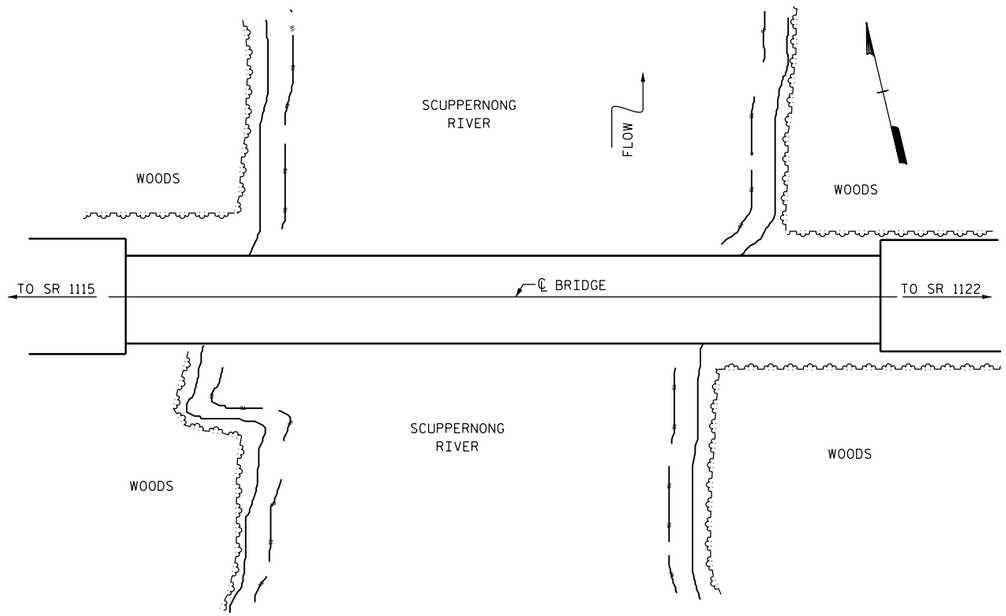

LOCATION SKETCH

INFORMATION INDICATED ON THE LOCATION SKETCH SHALL BE CONSIDERED GENERAL INFORMATION ONLY. THE CONTRACTOR SHALL CONFIRM, THROUGH OTHER SOURCES, SPECIFIC INFORMATION REGARDING THE BRIDGES, ROADWAYS, UTILITIES, SURROUNDING AREA AND ANY OTHER ASPECTS THAT MAY BE NECESSARY TO PERFORM AND COMPLETE THE PROJECT.

NOTES

EXISTING DIMENSIONS AND BRIDGE CONDITION ARE FROM BEST INFORMATION AVAILABLE. THE CONTRACTOR SHALL FIELD VERIFY THE INFORMATION SHOWN ON THE PLANS AND NOTIFY THE ENGINEER IF ACTUAL DIMENSIONS AND CONDITIONS DIFFER.

EXISTING JOINTS AND DECK DRAINS SHALL BE SEALED PRIOR TO BEGINNING SURFACE PREPARATION OF BRIDGE DECK.

ROADWAY MILLING IS INCLUDED TO ENSURE A SMOOTH TRANSITION ONTO THE BRIDGE FLOOR. DIMENSIONS SHOWN ARE APPROXIMATE. CONTRACTOR SHALL MILL AS REQUIRED TO PROVIDE A SMOOTH TRANSITION TO THE ROADWAY AT BOTH ENDS OF BRIDGE.

FOR CLEANING AND PAINTING OF BRIDGE AND POLLUTION CONTROL, SEE SPECIAL PROVISIONS.

FOR CONCRETE DECK REPAIR FOR EPOXY OVERLAY SYSTEM, SEE SPECIAL PROVISIONS.

FOR FOAM JOINT SEALS, SEE SPECIAL PROVISIONS.

FOR ELASTOMERIC CONCRETE, SEE SPECIAL PROVISIONS.

FOR OVERLAY OF BRIDGE WITH EPOXY OVERLAY SYSTEM, SEE SPECIAL PROVISIONS.

FOR SUBMITTAL OF WORKING DRAWINGS, SEE SPECIAL PROVISIONS.

FOR FALSEWORK AND FORMWORK, SEE SPECIALPROVISIONS.

FOR CRANE SAFETY, SEE SPECIAL PROVISIONS.

FOR GROUT FOR STRUCTURES, SEE SPECIAL PROVISIONS.

FOR BRIDGE JOINT DEMOLITION, SEE SPECIAL PROVISIONS.

FOE BRIDGE JACKING, SEE SPECIAL PROVISIONS.

IT IS THE CONTRACTOR'S RESPONSIBILITY TO FOLLOW ALL STATE AND FEDERAL SAFETY REQUIREMENTS.

FOR CONTROL OF TRAFFIC AND LIMITS OF PHASING OF CONSTRUCTION, SEE TRANSPORTATION MANAGEMENT PLAN SHEETS.

LONGITUDINAL CONSTRUCTION JOINTS OF OVERLAYS SHALL BE LOCATED ALONG THE CENTERLINE OR EDGE OF TRAVEL LANES.

PROJECT NO. BP-5500B
TYRRELL COUNTY
BRIDGE NO. 21
SHEET 2 OF 2

DocuSigned by:
John A. Yannaccone
7BC36E9CEE894...

NORTH CAROLINA PROFESSIONAL SEAL 32492 ENGINEER JOHN A. YANNACCONE

1/27/2015

STATE OF NORTH CAROLINA
DEPARTMENT OF TRANSPORTATION
RALEIGH

GENERAL DRAWING
FOR BRIDGE ON SR 1105
(NEWLANDS ROAD)
OVER SCUPPERNONG RIVER

REVISIONS						SHEET NO.
NO.	BY:	DATE:	NO.	BY:	DATE:	S-9
1			3			TOTAL SHEETS
2			4			16

DRAWN BY : S. T. SANDOR DATE : 11/2014
CHECKED BY : J. A. YANNACCONE DATE : 12/2014

27-JAN-2015 12:44
R:\Structures\FinalDrawings\TYRELL21_SD_GD.dgn
jayannaccone

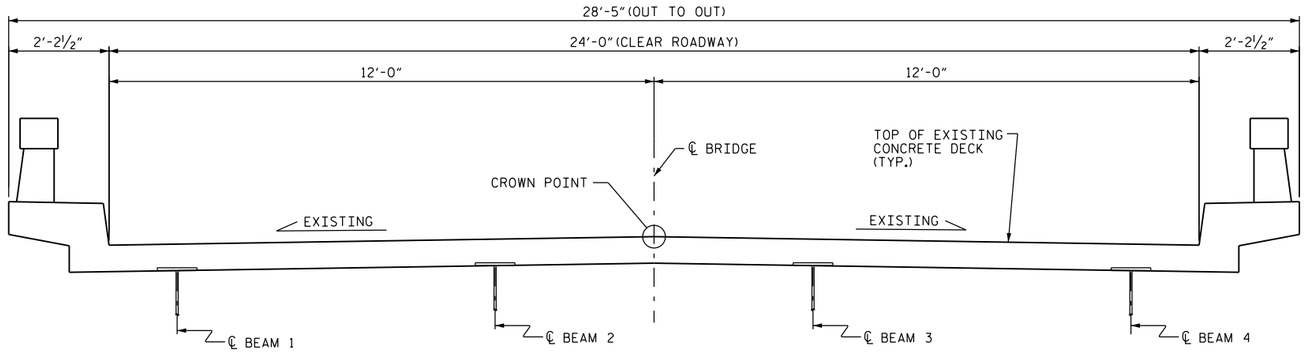

TYPICAL SECTION

(EXISTING)

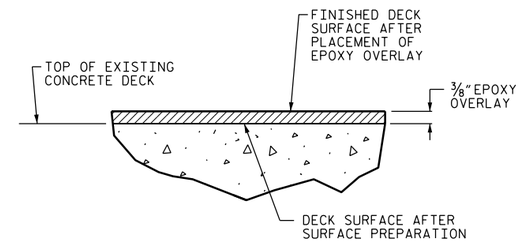

DETAIL FOR EPOXY OVERLAY

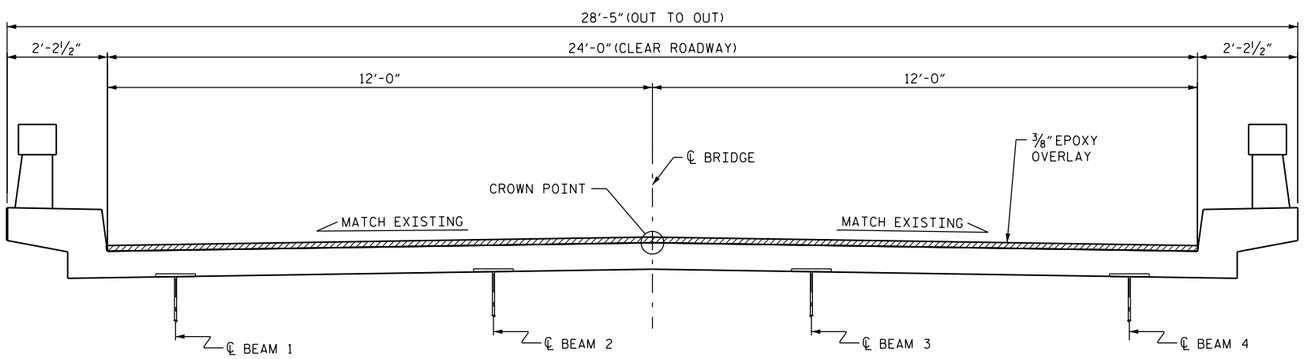

TYPICAL SECTION

(PROPROSED)

PROJECT NO. BP-5500B

TYRRELL COUNTY

BRIDGE NO. 21

STATE OF NORTH CAROLINA
DEPARTMENT OF TRANSPORTATION
RALEIGH

TYPICAL SECTION & EPOXY OVERLAY DETAIL

DocuSigned by:
John A. Yannaccone
7BC36E9CEE89...

NORTH CAROLINA PROFESSIONAL SEAL 32492 ENGINEER JOHN A. YANNACCONE

1/27/2015

REVISIONS						SHEET NO.
NO.	BY:	DATE:	NO.	BY:	DATE:	S-10
1			3			TOTAL SHEETS
2			4			16

DRAWN BY : S. T. SANDOR DATE : 11/2014
CHECKED BY : J. A. YANNACCONE DATE : 12/2014

27-JAN-2015 12:45
R:\Structures\FinalDrawings\TYRELL21_SD_TS.dgn
jayannaccone

SUMMARY OF QUANTITIES

	ESTIMATE	ACTUAL
CONCRETE DECK REPAIR FOR EPOXY OVERLAY	0 SQ. FT.	
BRIDGE JOINT DEMOLITION	132 SQ. FT.	
EPOXY OVERLAY SYSTEM	5,748 SQ. FT.	

NOTE:

FOR BRIDGE JOINT DEMOLITION, SEE "JOINT DETAILS" SHEET.

FOR SECTIONS A-A AND B-B, SEE "JOINT DETAILS" SHEET.

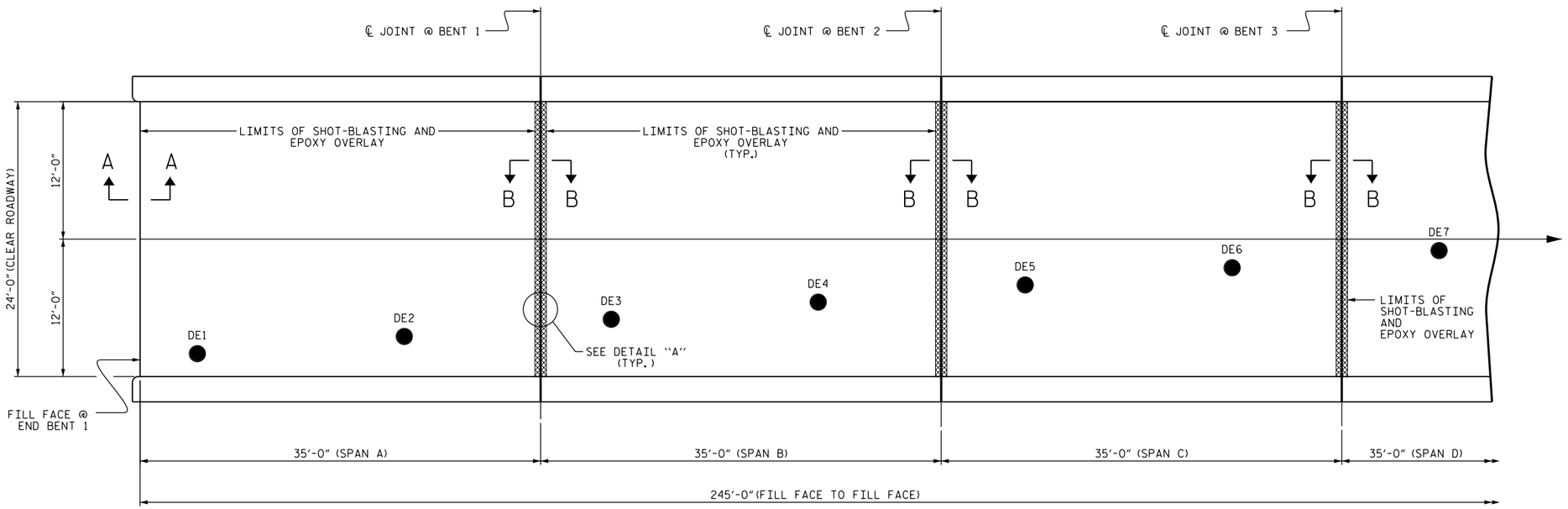

PLAN

CONCRETE DECK REPAIR FOR EPOXY OVERLAY

EPOXY OVERLAY

BRIDGE JOINT DEMOLITION

BRIDGE DECK EVALUATION SAMPLES

TEST LOCATION	REBAR COVER	CONCRETE STRENGTH
DE1	1 5/8"	4,840 PSI
DE2	2"	5,020 PSI
DE3	1 13/16"	6,480 PSI
DE4	1 3/4"	4,740 PSI
DE5	2 1/4"	5,940 PSI
DE6	2"	6,040 PSI
DE7	2 1/2"	5,640 PSI

NOTE: BRIDGE DECK EVALUATION SAMPLE DATA PROVIDED BY HDR REPORT, DATED 06/14/2014.

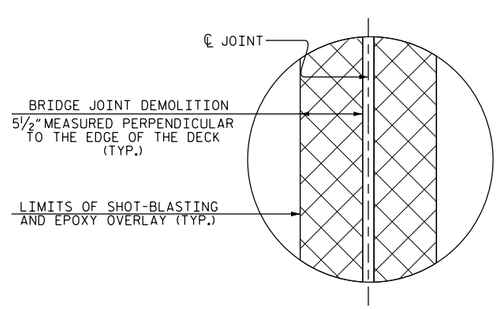

DETAIL "A"

PROJECT NO. BP-5500B

TYRRELL COUNTY

BRIDGE NO. 21

SHEET 1 OF 2

STATE OF NORTH CAROLINA
DEPARTMENT OF TRANSPORTATION
RALEIGH

SURFACE PREPARATION AND EPOXY OVERLAY

DocuSigned by:
John A. Yannaccone
7BC36E9CEE8C4...

NORTH CAROLINA PROFESSIONAL SEAL 32492 ENGINEER JOHN A. YANNACCONE

1/27/2015

REVISIONS						SHEET NO.
NO.	BY:	DATE:	NO.	BY:	DATE:	S-11
1			3			TOTAL SHEETS
2			4			16

DRAWN BY : S. T. SANDOR DATE : 11/2014

CHECKED BY : J. A. YANNACCONE DATE : 12/2014

27-JAN-2015 12:45
R:\Structures\FinalDrawings\TYRELL21_SD_S*.dgn
jayannaccone

NOTE:

FOR BRIDGE JOINT DEMOLITION, SEE "JOINT DETAILS" SHEET.
FOR SECTIONS A-A AND B-B, SEE "JOINT DETAILS" SHEET.
FOR DETAIL "A", SEE SHEET 1 OF 2.

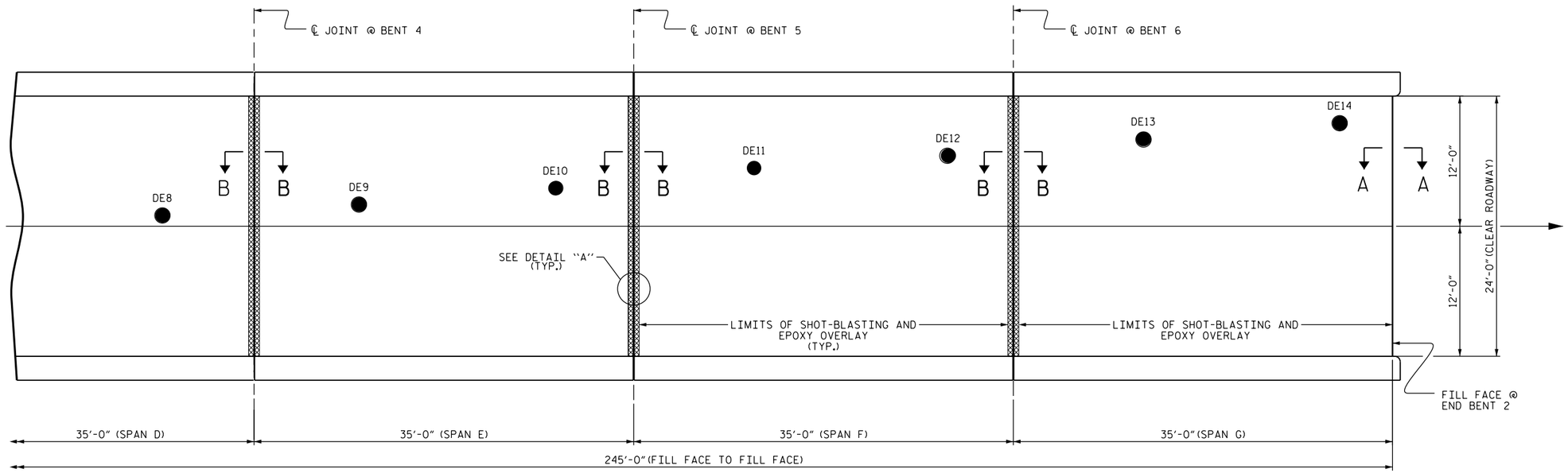

PLAN

CONCRETE DECK REPAIR FOR EPOXY OVERLAY

EPOXY OVERLAY

BRIDGE JOINT DEMOLITION

BRIDGE DECK EVALUATION SAMPLES

TEST LOCATION	REBAR COVER	CONCRETE STRENGTH
DE8	2 3/8"	4,700 PSI
DE9	2"	3,840 PSI
DE10	1 13/16"	5,020 PSI
DE11	2 3/8"	4,620 PSI
DE12	2 1/4"	4,800 PSI
DE13	2"	6,560 PSI
DE14	2"	4,180 PSI

PROJECT NO. BP-5500B
TYRRELL **COUNTY**
BRIDGE NO. 21
SHEET 2 OF 2

DocuSigned by:
John A. Yannaccone
7BC36E9CEE89...

NORTH CAROLINA PROFESSIONAL SEAL 32492 ENGINEER JOHN A. YANNACCONE

1/27/2015

STATE OF NORTH CAROLINA
DEPARTMENT OF TRANSPORTATION
RALEIGH

SURFACE PREPARATION AND EPOXY OVERLAY

REVISIONS						SHEET NO.
NO.	BY:	DATE:	NO.	BY:	DATE:	S-12
1			3			TOTAL SHEETS
2			4			16

DRAWN BY : S. T. SANDOR DATE : 11/2014
CHECKED BY : J. A. YANNACCONE DATE : 12/2014

27-JAN-2015 12:45
R:\Structures\Final Drawings\TYRELL21_SD_S*.dgn
jayannaccone

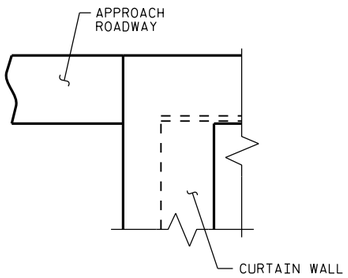

SECTION A-A
(EXISTING)

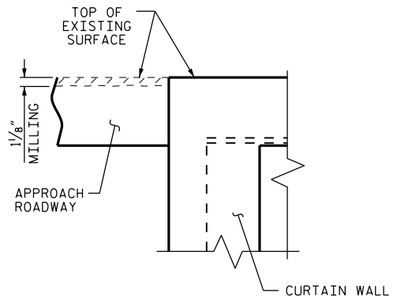

SECTION A-A
(MINIMUM EXISTING DEMOLITION)

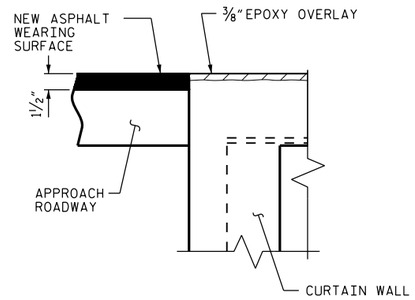

SECTION A-A
(PROPOSED)

NOTES:

FOR FOAM JOINT SEALS SEE SPECIAL PROVISIONS.

THE INSTALLED FOAM JOINT SEAL SHALL BE WATER TIGHT.

NOMINAL UNCOMPRESSED SEAL WIDTH OF FOAM JOINT SEAL SHALL BE 2".

THE CONTRACTOR WILL NOT BE PERMITTED TO FORM THE JOINTS IN LIEU OF SAWING THE JOINT.

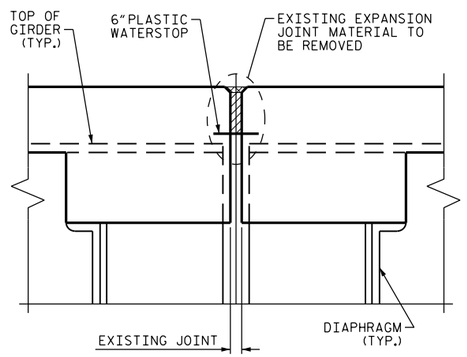

SECTION B-B
(EXISTING)

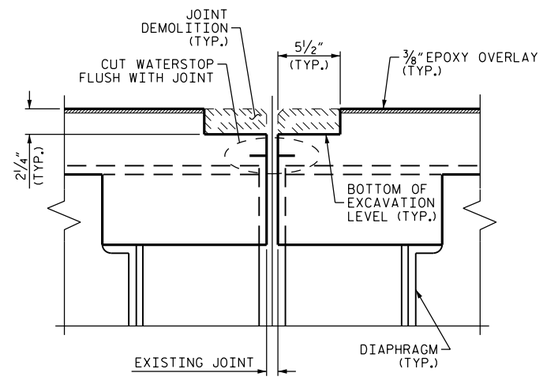

SECTION B-B
(MINIMUM EXISTING JOINT DEMOLITION)

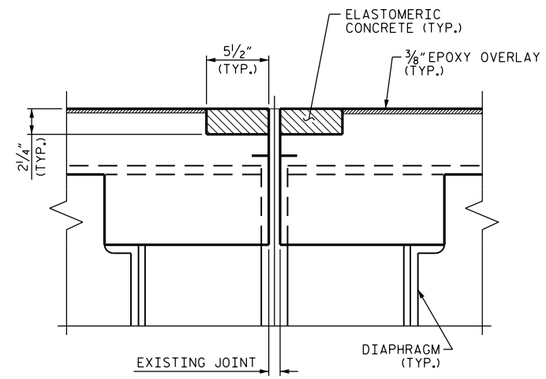

SECTION B-B
(PROPOSED JOINT PRE-SAWED DIMENSIONS)

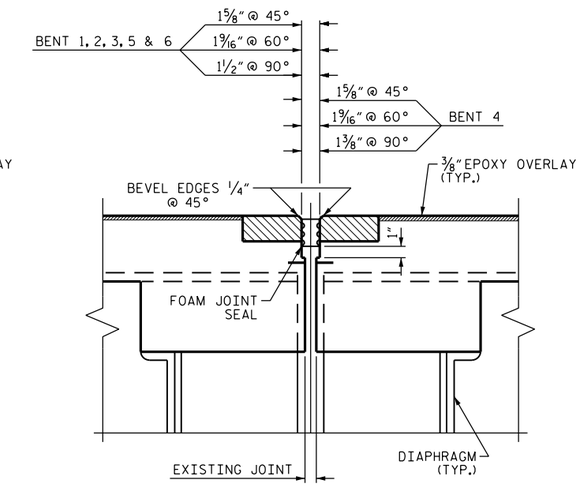

SECTION B-B
(PROPOSED FOAM JOINT SEAL)

IF THE EMBEDDED PORTION OF THE EXISTING PLASTIC WATERSTOP IS EXPOSED DURING REMOVAL OF UNSOUND CONCRETE OR IF UNSOUND CONCRETE IS REMOVED WITHIN 2" OF THE WATERSTOP, THE ENTIRE WATERSTOP SHALL BE REMOVED.

DEMOLISH BRIDGE JOINT AREA TO THE NECESSARY DEPTH, SUCH THAT ELASTOMERIC CONCRETE SHALL BE FOUNDED ON CONCRETE OR REPAIR CONCRETE SUBSTRATE.

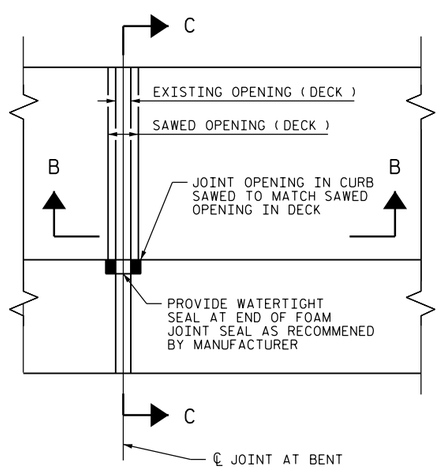

PLAN

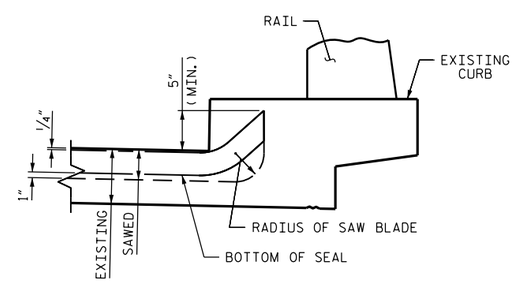

SECTION C-C

JOINT SEAL DETAILS AT BENT

PROJECT NO. BP-5500B
TYRRELL COUNTY
BRIDGE NO. 21

STATE OF NORTH CAROLINA
DEPARTMENT OF TRANSPORTATION
RALEIGH

JOINT DETAILS

DocuSigned by:
John A. Yannaccone
7BC36E9CEE89...

NORTH CAROLINA PROFESSIONAL SEAL 32492 ENGINEER JOHN A. YANNACCONE

1/27/2015

REVISIONS						SHEET NO.
NO.	BY:	DATE:	NO.	BY:	DATE:	S-13
1			3			TOTAL SHEETS
2			4			16

DRAWN BY : S. T. SANDOR DATE : 11/2014
CHECKED BY : J. A. YANNACCONE DATE : 11/2014

27-JAN-2015 12:45
R:\Structures\FinalDrawings\TYRELL21_SD_JS.dgn
jayannaccone

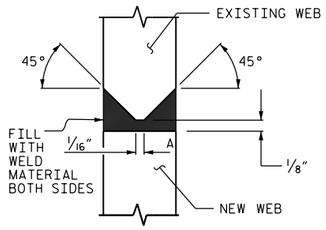

DETAIL "A"

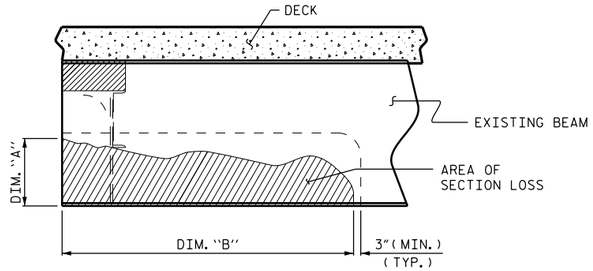

SECTION LOSS BEAM END REPAIR

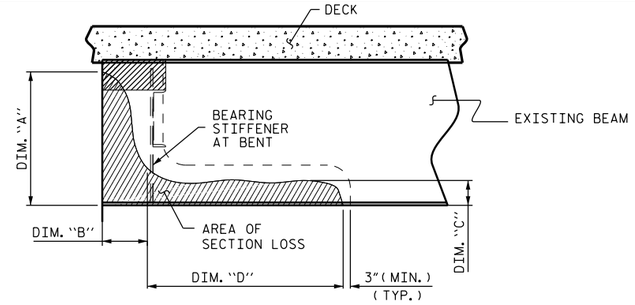

SECTION LOSS BEAM END REPAIR

* NOT NEEDED IF REPAIRED SECTION IS CUT FROM A ROLLED BEAM

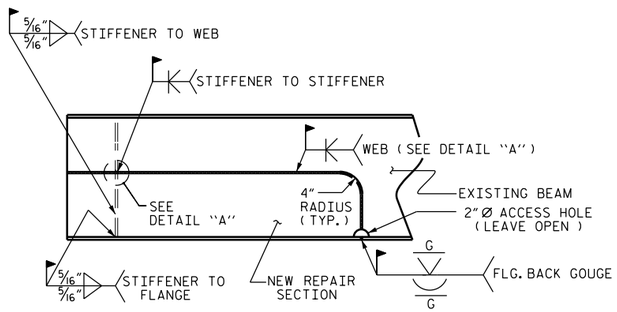

SECTION LOSS BEAM END REPAIR SECTION

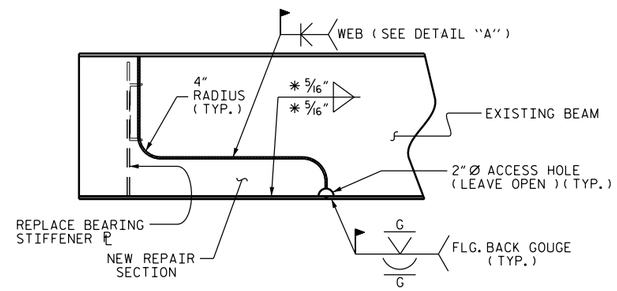

SECTION LOSS BEAM END REPAIR SECTION

BILL OF MATERIAL

BRIDGE JACKING	BEAM REPAIR
EA.	LBS.
4	640

ANTICIPATED BEAM REPAIR LOCATIONS

SPAN	BEAM	LOCATION	DIM "A"	DIM "B"
A	4	BENT 1	6"	1'-8"
B	1	BENT 2	6"	4'-6"
E	1	BENT 4	6"	3'-0"
E	4	BENT 5	6"	3'-0"

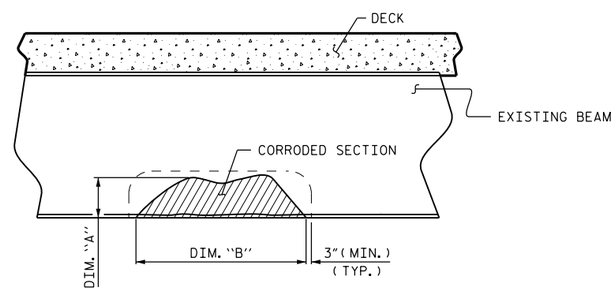

SECTION LOSS INTERMEDIATE BEAM REPAIR

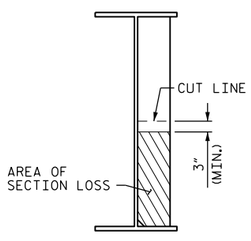

SECTION LOSS STIFFENER/CONN. ℄ REPAIR

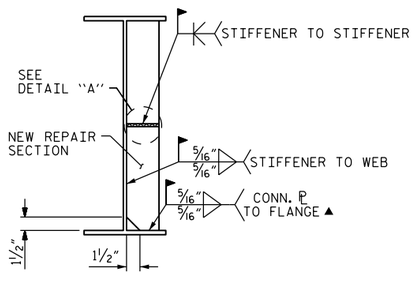

SECTION LOSS STIFFENER/CONN. ℄ REPAIR SECTION

▲ FOR STIFFENERS, MILL TO BEAR AND DO NOT WELD

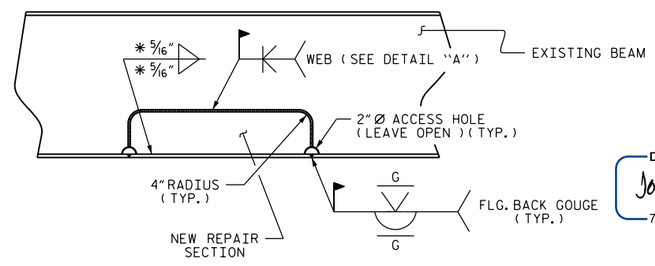

SECTION LOSS INTERMEDIATE BEAM REPAIR SECTION

BEAM REPAIR

AFTER THE STRUCTURAL STEEL HAS BEEN BLASTED AND PRIMED, THE STRUCTURAL STEEL AND BEARING SHALL BE INSPECTED FOR EXCESSIVE SECTION LOSS. AREAS THAT EXHIBIT AN EXCESS OF 35% SECTION LOSS SHALL BE REVIEWED BY THE ENGINEER TO DETERMINE IF AREA OF SECTION LOSS SHOULD BE REPAIRED.

AS DETERMINED BY THE ENGINEER, AREAS WITH EXCESSIVE SECTION LOSS OR AREAS WITH TEMPORARY REPAIRS SHALL BE REMOVED AND THE BEAMS SHALL BE REPAIRED AS INDICATED ON THIS PLAN SHEET. CONTRACTOR AND ENGINEER TO DETERMINE ACTUAL DIMENSIONS OF AREA TO BE REMOVED AND REPLACED. REMOVE CONCRETE BENT DIAPHRAGMS AS NEEDED TO EVALUATE LIMITS OF REPAIR.

PAYMENT FOR THE SECTION REPAIR SHALL BE BASED ON THAT AMOUNT OF REPAIR ACTUALLY PERFORMED BY THE CONTRACTOR AND APPROVED BY THE ENGINEER.

GOUGES AND INDENTIONS FROM IMPACT ON GIRDERS SHALL BE GROUND SMOOTH PRIOR TO BLASTING AND PAINTING OPERATION.

REPAIR SEQUENCE:

REMOVE LIVE LOAD FROM REPAIR AREA BY EITHER CLOSING BRIDGE TO TRAFFIC OR SHIFTING TRAFFIC AWAY FROM REPAIR AREA.

REMOVE DEAD LOAD FROM BEAM BY JACKING AND BLOCKING. CONTRACTOR SHALL SUBMIT JACKING PLAN FOR APPROVAL, PRIOR TO BEGINNING WORK. FOR BRIDGE JACKING, SEE SPECIAL PROVISIONS.

STEEL DIAPHRAGM CHANNELS AND/OR STIFFENERS MAY BE TEMPORARILY REMOVED, IF NECESSARY, AND REPLACED AFTER BEAM REPAIR.

IF BEAM DETERIORATION EXTENDS INTO THE CONCRETE DIAPHRAGM THEN CHIP AWAY CONCRETE TO DETERMINE THE EXTENT OF THE DAMAGE. CUT OUT BY APPROPRIATE MEANS THE DAMAGED BEAM AREA AND/OR BEARING STIFFENER.

MECHANICALLY CLEAN RUST, SCALE, AND EXISTING PAINT TO AT LEAST 3" BEYOND REPAIR AREA.

REPLACEMENT CUT-TO-FIT BEAM SECTION SHALL BE NEW AND FROM SIMILAR SIZE ROLLED BEAM OR APPROVED EQUIVALENT PLATES. THE GRADE OF STEEL SHALL BE AASHTO M270, GRADE 36 OR BETTER.

INSTALL THE CUT-TO-FIT SECTION, FULLY WELD ALONG TOP AND SIDES OF PLATE USING FULL PENETRATION WELDS.

ALL WELDING SHALL BE IN ACCORDANCE WITH CURRENT APPLICABLE AWS AND NCDOT STANDARD SPECIFICATIONS.

ALL WELDS WILL BE INSPECTED AND TESTED BY THE NCDOT MATERIALS AND TEST UNIT IN ACCORDANCE WITH THE CURRENT AWS BRIDGE WELDING CODE AND STANDARD SPECIFICATIONS.

IN ACCORDANCE WITH THE STANDARD SPECIFICATIONS, AFTER REPAIR, GRIND ALL WELDS FLUSH, THOROUGHLY CLEAN AREA TO REMOVE DEBRIS AND OILS FROM REPAIR PROCESS,

CLEANING AND PAINTING OF REPAIRED STRUCTURAL STEEL SHALL BE PERFORMED AS PART OF THE OVERALL CLEANING AND PAINTING CONTRACT.

FOR CLEANING AND PAINTING, SEE PROJECT SPECIAL PROVISIONS.

AFTER BEAMS ARE REPAIRED AND PAINTED, ANY CONCRETE REMOVED FROM THE BENT DIAPHRAGMS SHALL BE CAST BACK. ANY REINFORCING STEEL CUT DURING THE REMOVAL PROCESS SHALL BE SPLICED WITH A SIMLAR SIZE BAR WITH AT LEAST A ONE FOOT SPLICE TO THE EXISTING STEEL. NO SEPARATE PAYMENT SHALL BE MADE FOR CONCRETE AND REINFORCING STEEL AS THIS IS CONSIDERED INCIDENTAL TO THE PAY ITEM "BEAM REPAIR". FOR BEAM REPAIR, SEE SPECIAL PROVISIONS.

LOWER SPAN TO BEAR; CHECK FOR DISTRESS.

REMOVE JACKING EQUIPMENT AND TEMPORARY SUPPORTS.

REMOVE ALL TRAFFIC CONTROL DEVICES.

PROJECT NO. BP-5500B
TYRRELL COUNTY
BRIDGE NO. 21

DocuSigned by:
John A. Yannaccone
7BC36E9CEE8C...

NORTH CAROLINA PROFESSIONAL SEAL 32492 ENGINEER JOHN A. YANNACCONE

1/27/2015

STATE OF NORTH CAROLINA
DEPARTMENT OF TRANSPORTATION
RALEIGH

BEAM END AND INTERMEDIATE REPAIR DETAILS

REVISIONS								SHEET NO.
NO.	BY:	DATE:	NO.	BY:	DATE:			S-14
1			3					TOTAL SHEETS
2			4					16

DRAWN BY : S. T. SANDOR DATE : 11/2014
CHECKED BY : J. A. YANNACCONE DATE : 12/2014

27-JAN-2015 12:46
R:\Structures\Final Drawings\TYRELL21_SD_BEAM_REPAIR.dgn
jayannaccone

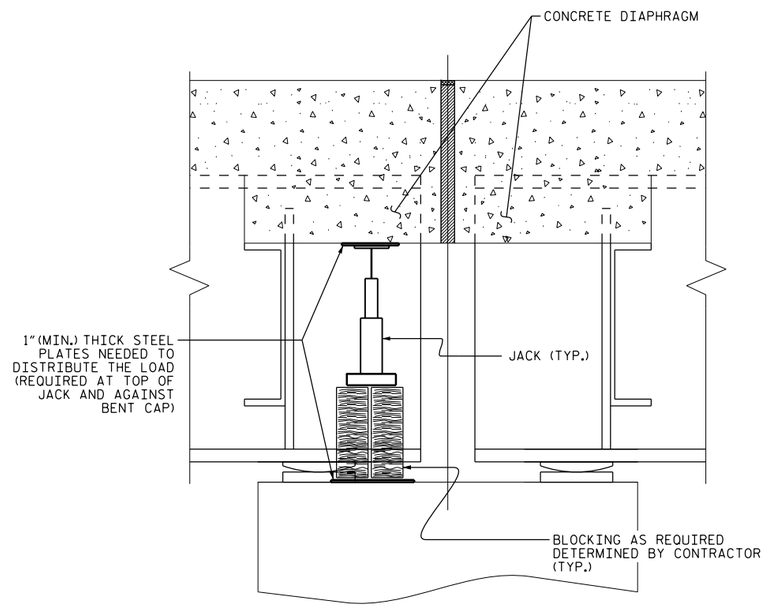

SECTION THRU DIAPHRAGM

JACKING NOTES:

THE CONTRACTOR SHALL SUBMIT JACKING PLANS AND CALCULATIONS FOR REVIEW AND APPROVAL PRIOR TO TO MATERIAL PURCHASE OR FABRICATION OF THE JACKING SYSTEM.

THE CONTRACTOR SHALL JACK ALL GIRDERS IN A SPAN ON AN INDIVIDUAL BENT SIMULTANEOUSLY BY MEANS OF A DUAL-FLOW PRESSURIZED PUMP CONTROLLING THE JACKS.

THE SPAN SHALL BE LIFTED ENOUGH THAT THE BEAMS CLEAR THE BEARINGS AND ALL LOAD IS SUPPORTED BY THE JACKS. AFTER JACKING IS COMPLETE THE CONTRACTOR SHALL PROVIDE A METHOD TO SUPPORT THE SPAN FOR DEAD AND LIVE LOADS AND REMOVE THE JACKS DURING BEAM REPAIR OR IF JACKS REMAIN IN PLACE DURING THE ENTIRE JACKING AND REPAIR OPERATION IT SHALL HAVE MECHANICAL LOCK OFF CAPABILITIES.

IF DURING THE JACKING PROCESS OR WHILE THE SPAN IS BEING SUPPORTED THE BEAMS SHIFT FROM THEIR ORIGINAL POSTION, ALL WORK WILL CEASE AND THE ENGINEER SHALL BE NOTIFIED IMMEDIATELY.

PRIOR TO JACKING, THE CONTRACTOR SHALL ENSURE THERE ARE NO OBSTACLES PREVENTING THE SPAN FROM BEING LIFTED.

ALL ADJACENT BEARINGS OF BEAMS NOT BEING JACKED MAY BE LOOSENED TO DECREASE THE RESISTANCE OF THE DECK SLAB DURING JACKING. ALL BEARINGS LOOSENED SHALL BE TIGHTENED BACK AFTER THE BEAMS ARE REPAIRED AND THE JACKS AND BLOCKING HAVE BEEN REMOVED.

PAYMENT OF JACKING WILL BE MADE AT THE LUMP SUM PRICE BID FOR BRIDGE JACKING. SUCH LUMP SUM PRICE WILL BE FULL COMPENSATION FOR ALL MATERIALS, EQUIPMENT, TOOLS, LABOR, AND INCIDENTALS NECESSARY TO COMPLETE THE WORK.

PROJECT NO. BP-5500B
TYRRELL COUNTY
BRIDGE NO. 21

DocuSigned by:
John A. Yannaccone
7BC36E9CEE89...

NORTH CAROLINA PROFESSIONAL SEAL 32492 ENGINEER JOHN A. YANNACCONE

1/27/2015

STATE OF NORTH CAROLINA
DEPARTMENT OF TRANSPORTATION
RALEIGH

JACKING DETAILS

REVISIONS						SHEET NO.
NO.	BY:	DATE:	NO.	BY:	DATE:	S-15
1			3			TOTAL SHEETS
2			4			16

DRAWN BY : S. T. SANDOR DATE : 11/2014
CHECKED BY : J. A. YANNACCONE DATE : 12/2014

27-JAN-2015 12:46
R:\Structures\FinalDrawings\TYRELL21_SD_BEAM_REPAIR.dgn
jayannaccone

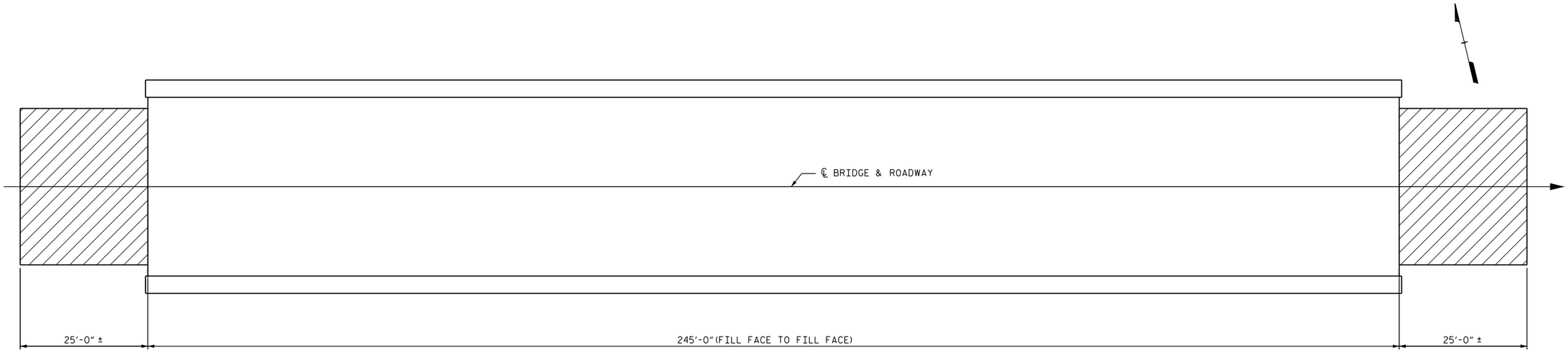

INCIDENTAL MILLING

PLAN

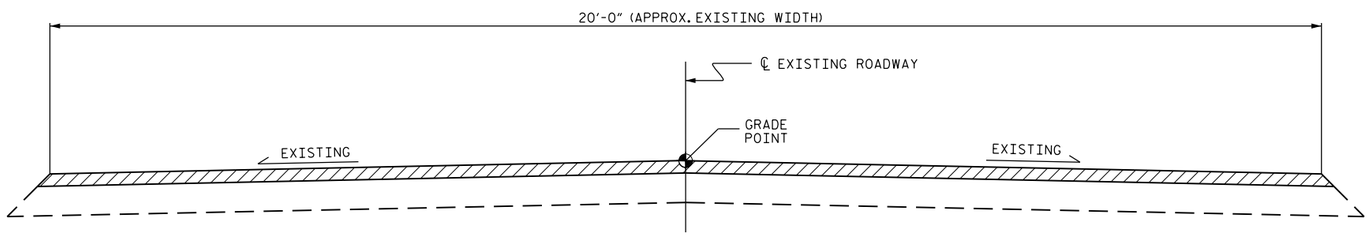

TYPICAL ROADWAY MILLING SECTION

(MILL TO APPROXIMATE 1⅛" DEPTH)

C1	PROPOSED VARIABLE DEPTH ASPHALT CONCRETE SURFACE COURSE, TYPE S9.5B AT AN AVERAGE RATE OF 112 LBS. PER SQ. YD. PER 1" DEPTH. TO BE PLACED IN LAYERS NOT LESS THAN 1½" IN DEPTH OR GREATER THAN 2 " IN DEPTH.

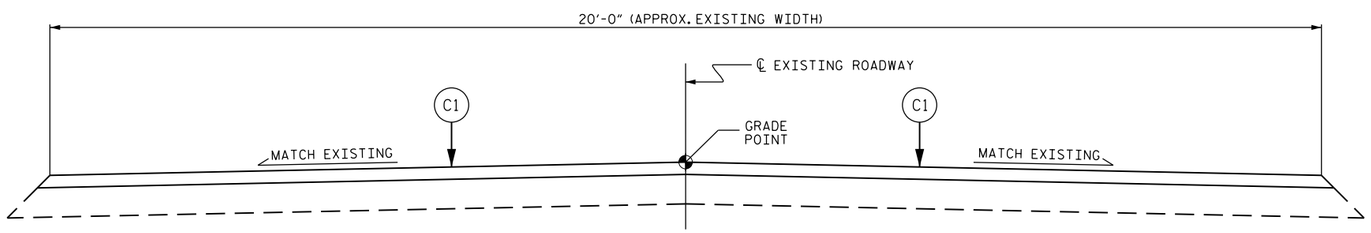

TYPICAL PROPOSED ROADWAY SECTION

SUMMARY OF QUANTITIES

	ESTIMATE	ACTUAL
INCIDENTAL MILLING	115 SQ. YDS.	
ASPHALT CONCRETE SURFACE COURSE, TYPE S9.5B	10 TONS	

NOTES:

INCIDENTAL MILLING - EXISTING APPROACH ASPHALT PAVEMENT TO BE MILLED AS NECESSARY TO ATTAIN MINIMUM 1½" DEPTH OF NEW ASPHALT PAVEMENT. PROVIDE NEW ASPHALT PAVING THICKNESS TO CREATE A SMOOTH TRANSITION TO THE APPROACH SLABS, AS SHOWN. NEW ASPHALT PAVING THICKNESS MAY EXCEED 1½" DUE TO SETTLEMENT OF THE EXISTING APPROACH ASPHALT PAVEMENT.

PROJECT NO. BP-5500B
TYRRELL COUNTY
BRIDGE NO. 21

DocuSigned by:
John A. Yannaccone
7BC36E9CEE89...

NORTH CAROLINA PROFESSIONAL SEAL 32492 ENGINEER JOHN A. YANNACCONE

1/27/2015

STATE OF NORTH CAROLINA
DEPARTMENT OF TRANSPORTATION
RALEIGH

APPROACH MILLING AND TYPICAL ROADWAY SECTIONS

REVISIONS						SHEET NO.
NO.	BY:	DATE:	NO.	BY:	DATE:	S-16
1			3			TOTAL SHEETS
2			4			16

DRAWN BY : S. T. SANDOR DATE : 11/2014
CHECKED BY : J. A. YANNACCONE DATE : 12/2014

27-JAN-2015 12:46
R:\Structures\FinalDrawings\TYRELL21_SD_APPRDWY.dgn
jayannaccone

STANDARD NOTES

DESIGN DATA:

SPECIFICATIONS - - - - - - - - - - - - - - -	A.A.S.H.T.O. (CURRENT)
LIVE LOAD - - - - - - - - - - - - - - - - - -	SEE PLANS
IMPACT ALLOWANCE - - - - - - - - - - - - - - -	SEE A.A.S.H.T.O.
STRESS IN EXTREME FIBER OF	
STRUCTURAL STEEL - AASHTO M270 GRADE 36 -	20,000 LBS. PER SQ. IN.
- AASHTO M270 GRADE 50W -	27,000 LBS. PER SQ. IN.
- AASHTO M270 GRADE 50 -	27,000 LBS. PER SQ. IN.
REINFORCING STEEL IN TENSION	
GRADE 60 - -	24,000 LBS. PER SQ. IN.
CONCRETE IN COMPRESSION - - - - - - - - - -	1,200 LBS. PER SQ. IN.
CONCRETE IN SHEAR - - - - - - - - - - - - - -	SEE A.A.S.H.T.O.
STRUCTURAL TIMBER - TREATED OR	
UNTREATED - EXTREME FIBER STRESS - - - - -	1,800 LBS. PER SQ. IN.
COMPRESSION PERPENDICULAR TO GRAIN OF TIMBER - - - -	375 LBS. PER SQ. IN.
EQUIVALENT FLUID PRESSURE OF EARTH - - - - -	30 LBS. PER CU. FT. (MINIMUM)

MATERIAL AND WORKMANSHIP:

EXCEPT AS MAY OTHERWISE BE SPECIFIED ON PLANS OR IN THE SPECIAL PROVISIONS, ALL MATERIAL AND WORKMANSHIP SHALL BE IN ACCORDANCE WITH THE 2012 "STANDARD SPECIFICATIONS FOR ROADS AND STRUCTURES" OF THE N. C. DEPARTMENT OF TRANSPORTATION.

STEEL SHEET PILING FOR PERMANENT OR TEMPORARY APPLICATIONS SHALL BE HOT ROLLED.

CONCRETE:

UNLESS OTHERWISE REQUIRED ON PLANS, CLASS A CONCRETE SHALL BE USED FOR ALL PORTIONS OF ALL STRUCTURES WITH THE EXCEPTION THAT: CLASS AA CONCRETE SHALL BE USED IN BRIDGE SUPERSTRUCTURES, ABUTMENT BACKWALLS, AND APPROACH SLABS; AND CLASS B CONCRETE SHALL BE USED FOR SLOPE PROTECTION AND RIP RAP.

CONCRETE CHAMFERS:

UNLESS OTHERWISE NOTED ON THE PLANS, ALL EXPOSED CORNERS ON STRUCTURES SHALL BE CHAMFERED 3/4" WITH THE FOLLOWING EXCEPTIONS: TOP CORNERS OF CURBS MAY BE ROUNDED TO 1-1/2" RADIUS WHICH IS BUILT INTO CURB FORMS; CORNERS OF TRANSVERSE FLOOR EXPANSION JOINTS SHALL BE ROUNDED WITH A 1/4" FINISHING TOOL UNLESS OTHERWISE REQUIRED ON PLANS; AND CORNERS OF EXPANSION JOINTS IN THE ROADWAY FACES AND TOPS OF CURBS AND SIDEWALKS SHALL BE ROUNDED TO A 1/4" RADIUS WITH A FINISHING STONE OR TOOL UNLESS OTHERWISE REQUIRED ON PLANS.

DOWELS:

DOWELS WHEN INDICATED ON PLANS AS FOR CULVERT EXTENSIONS, SHALL BE EMBEDDED AT LEAST 12" INTO THE OLD CONCRETE AND GROUTED INTO PLACE WITH 1:2 CEMENT MORTAR.

ALLOWANCE FOR DEAD LOAD DEFLECTION, SETTLEMENT, ETC. IN CASTING SUPERSTRUCTURES:

BRIDGES SHALL BE BUILT ON THE GRADE OR VERTICAL CURVE SHOWN ON PLANS. SLABS, CURBS AND PARAPETS SHALL CONFORM TO THE GRADE OR CURVE.

ALL DIMENSIONS WHICH ARE GIVEN IN SECTION AND ARE AFFECTED BY DEAD LOAD DEFLECTIONS ARE DIMENSIONS AT CENTER LINE OF BEARING UNLESS OTHERWISE NOTED ON PLANS. IN SETTING FORMS FOR STEEL BEAM BRIDGES AND PRESTRESSED CONCRETE GIRDER BRIDGES, ADJUSTMENTS SHALL BE MADE DUE TO THE DEAD LOAD DEFLECTIONS FOR THE ELEVATIONS SHOWN. WHERE BLOCKS ARE SHOWN OVER BEAMS FOR BUILDING UP TO THE SLAB, THE VERTICAL DIMENSIONS OF THE BLOCKS SHALL BE ADJUSTED BETWEEN BEARINGS TO COMPENSATE FOR DEAD LOAD DEFLECTIONS, VERTICAL CURVE ORDINATE, AND ACTUAL BEAM CAMBER. WHERE BOTTOM OF SLAB IS IN LINE WITH BOTTOM OF TOP FLANGES, DEPTH OF SLAB BETWEEN BEARINGS SHALL BE ADJUSTED TO COMPENSATE FOR DEAD LOAD DEFLECTION, VERTICAL CURVE ORDINATE, AND ACTUAL BEAM CAMBER.

IN SETTING FALSEWORK AND FORMS FOR REINFORCED CONCRETE SPANS, AN ALLOWANCE SHALL BE MADE FOR DEAD LOAD DEFLECTIONS, SETTLEMENT OF FALSEWORK, AND PERMANENT CAMBER WHICH SHALL BE PROVIDED FOR IN ADDITION TO THE ELEVATIONS SHOWN. AFTER REMOVAL OF THE FALSEWORK, THE FINISHED STRUCTURES SHALL CONFORM TO THE PROFILE AND ELEVATIONS SHOWN ON THE PLANS AND CONSTRUCTION ELEVATIONS FURNISHED BY THE ENGINEER.

DETAILED DRAWINGS FOR FALSEWORK OR FORMS FOR BRIDGE SUPERSTRUCTURE AND ANY STRUCTURE OR PARTS OF A STRUCTURE AS NOTED ON THE PLANS SHALL BE SUBMITTED TO THE ENGINEER FOR APPROVAL BEFORE CONSTRUCTION OF THE FALSEWORK OR FORMS IS STARTED.

REINFORCING STEEL:

ALL REINFORCING STEEL SHALL BE DEFORMED. DIMENSIONS RELATIVE TO PLACEMENT OF REINFORCING ARE TO CENTERS OF BARS UNLESS OTHERWISE INDICATED IN THE PLANS. DIMENSIONS ON BAR DETAILS ARE TO CENTERS OF BARS OR ARE OUT TO OUT AS INDICATED ON PLANS.

WIRE BAR SUPPORTS SHALL BE PROVIDED FOR REINFORCING STEEL WHERE INDICATED ON THE PLANS. WHEN BAR SUPPORT PIECES ARE PLACED IN CONTINUOUS LINES, THEY SHALL BE SO PLACED THAT THE ENDS OF THE SUPPORTING WIRES SHALL BE LAPPED TO LOCK LEGS ON ADJOINING PIECES.

STRUCTURAL STEEL:

AT THE CONTRACTOR'S OPTION, HE MAY SUBSTITUTE 7/8" Ø SHEAR STUDS FOR THE 3/4" Ø STUDS SPECIFIED ON THE PLANS. THIS SUBSTITUTION SHALL BE MADE AT THE RATE OF 3 - 7/8" Ø STUDS FOR 4 - 3/4" Ø STUDS, AND STUD SPACING CHANGES SHALL BE MADE AS NECESSARY TO PROVIDE THE SAME EQUIVALENT NUMBER OF 7/8" Ø STUDS ALONG THE BEAM AS SHOWN FOR 3/4" Ø STUDS BASED ON THE RATIO OF 3 - 7/8" Ø STUDS FOR 4 - 3/4" Ø STUDS. STUDS OF THE LENGTH SPECIFIED ON THE PLANS MUST BE PROVIDED. THE MAXIMUM SPACING SHALL BE 2'-0".

EXCEPT AT THE INTERIOR SUPPORTS OF CONTINUOUS BEAMS WHERE THE COVER PLATE IS IN CONTACT WITH BEARING PLATE, THE CONTRACTOR MAY, AT HIS OPTION, SUBSTITUTE FOR THE COVER PLATES DESIGNATED ON THE PLANS COVER PLATES OF THE EQUIVALENT AREA PROVIDED THESE PLATES ARE AT LEAST 5/16" IN THICKNESS AND DO NOT EXCEED A WIDTH EQUAL TO THE FLANGE WIDTH LESS 2" OR A THICKNESS EQUAL TO 2 TIMES THE FLANGE THICKNESS. THE SIZE OF FILLET WELDS SHALL CONFORM TO THE REQUIREMENTS OF THE CURRENT ANSI/AASHTO/AWS "BRIDGE WELDING CODE". ELECTROSLAG WELDING WILL NOT BE PERMITTED.

WITH THE SOLE EXCEPTION OF EDGES AT SURFACES WHICH BEAR ON OTHER SURFACES, ALL SHARP EDGES AND ENDS OF SHAPES AND PLATES SHALL BE SLIGHTLY ROUNDED BY SUITABLE MEANS TO A RADIUS OF APPROXIMATELY 1/16 INCH OR EQUIVALENT FLAT SURFACE AT A SUITABLE ANGLE PRIOR TO PAINTING, GALVANIZING, OR METALLIZING.

HANDRAILS AND POSTS:

METAL STANDARDS AND FACES OF THE CONCRETE END POSTS FOR THE METAL RAIL SHALL BE SET NORMAL TO THE GRADE OF THE CURB, UNLESS OTHERWISE SHOWN ON PLANS. THE METAL RAIL AND TOPS OF CONCRETE POSTS USED WITH THE ALUMINUM RAIL SHALL BE BUILT PARALLEL TO THE GRADE OF THE CURB.

METAL HANDRAILS SHALL BE IN ACCORDANCE WITH THE PLANS. RAILS SHALL BE AS MANUFACTURED FOR BRIDGE RAILING. CASTINGS SHALL BE OF A UNIFORM APPEARANCE. FINS AND OTHER DEFORMATIONS RESULTING FROM CASTING OR OTHERWISE SHALL BE REMOVED IN A MANNER SO THAT A UNIFORM COLORING OF THE COMPLETED CASTING SHALL BE OBTAINED. CASTINGS WITH DISCOLORATIONS OR OF NON-UNIFORM COLORING WILL NOT BE ACCEPTED. CERTIFIED MILL REPORTS ARE REQUIRED FOR METAL RAILS AND POSTS.

SPECIAL NOTES:

GENERALLY, IN CASE OF DISCREPANCY, THIS STANDARD SHEET OF NOTES SHALL GOVERN OVER THE SPECIFICATIONS, BUT THE REMAINDER OF THE PLANS SHALL GOVERN OVER NOTES HEREON, AND SPECIAL PROVISIONS SHALL GOVERN OVER ALL. SEE SPECIFICATIONS ARTICLE 105-4.

ENGLISH

JANUARY, 1990

PROJECT REFERENCE NO.	SHEET NO.

NOTES:
1) DETAIL DOES NOT APPLY TO OGAFC AND ULTRA-THIN BONDED WEARING COURSE.
2) BACKFILL SHOULDER WITH APPROVED MATERIAL.
3) THE SHOULDER WEDGE DEVICE MAY BE DISENGAGED AT PAVED DRIVEWAYS AND SIDE STREETS.

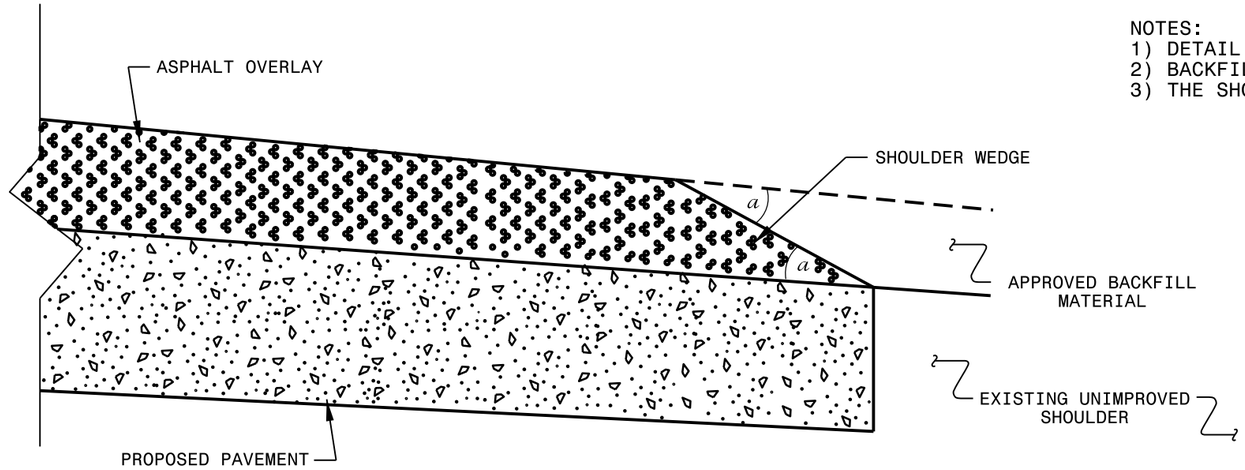

SHOULDER WEDGE DETAIL

(Resurfacing Projects w/ Widening or with Existing Paved Shoulder having no dropoffs)

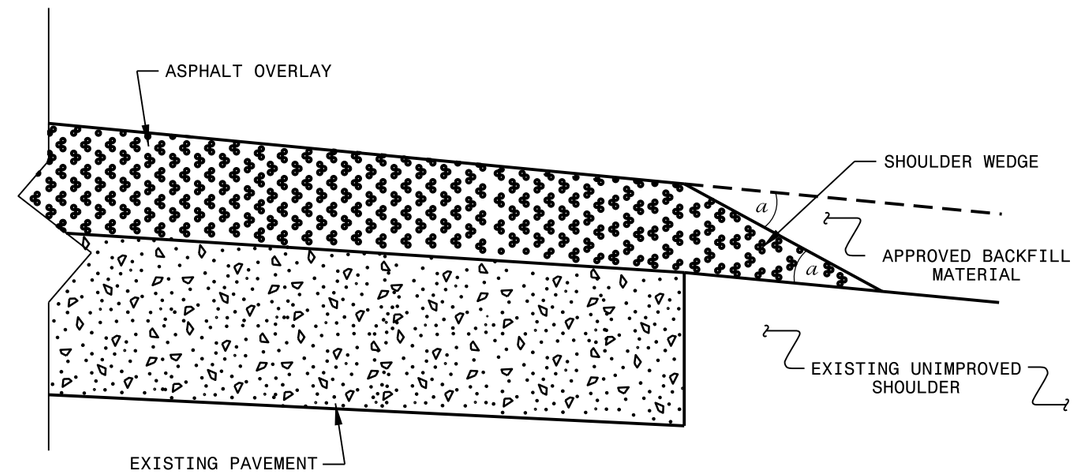

SHOULDER WEDGE DETAIL

(Resurfacing Projects w/ NO Widening)

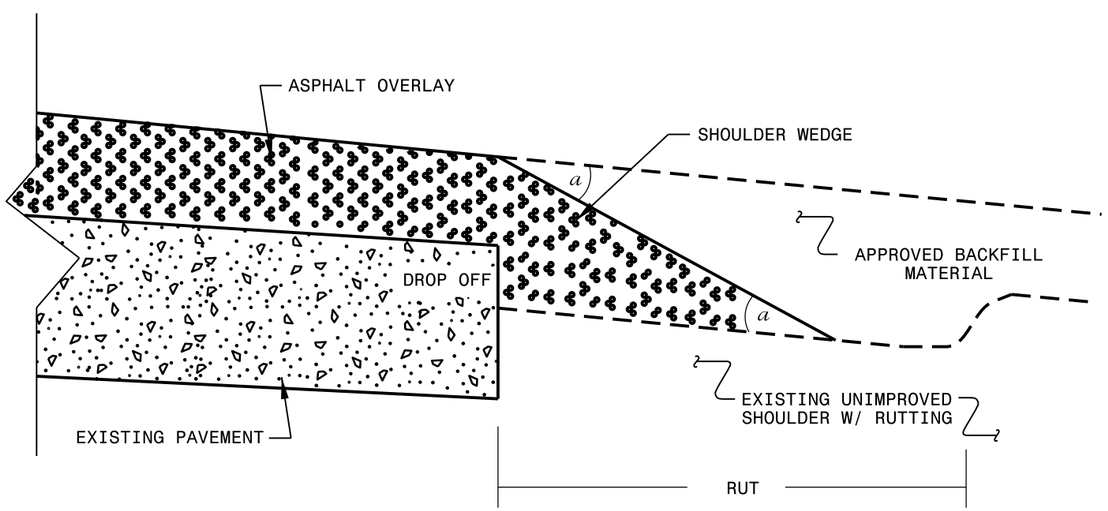

SHOULDER WEDGE DETAIL

(Resurfacing Adjacent to Rutted Shoulder)

- SHOULDER WEDGE ANGLE = 30°

CONTRACT STANDARDS AND DEVELOPMENT UNIT
Office 919-707-6950 FAX 919-250-4119

SHOULDER WEDGE DETAILS

ORIGINAL BY:	T.SPELL	DATE:	7-19-11
MODIFIED BY:		DATE:	10/16/12
CHECKED BY:		DATE:	
FILE SPEC.:	s:usr/details/stand/shoulderwedgedetail.dgn		

09-FEB-2015 9:56
s:\Roadway\Design\Paving Maps\Shoulder detail\Revised Shoulder Wedge Detail.dgn
bstaum AT DICAD27026